higher education & training

Department:
Higher Education and Training
REPUBLIC OF SOUTH AFRICA

NATIONAL CERTIFICATE (VOCATIONAL)

ELECTROTECHNOLOGY
NQF LEVEL 4

(12040594)

10 November 2022 (X-paper)
09:00–12:00

This question paper consists of 8 pages.

225Q1N2210

Copyright reserved

TIME: 3 HOURS
MARKS: 100

INSTRUCTIONS AND INFORMATION

1. Answer all the questions.
2. Read all the questions carefully.
3. Number the answers according to the numbering system used in this question paper.
4. Start each section on a new page.
5. Use only a blue or black pen.
6. Write neatly and legibly.

Copyright reserved

QUESTION 1

1.1 The nameplate gives information about the motor. Listed below are some information found on the nameplate.

Give a brief description of what is meant by the following information:

1.1.1 Current

1.1.2 Frequency

1.1.3 Efficiency

1.1.4 Speed

1.1.5 Power

(5 × 1) (5)

1.2 A 380 V synchronous motor draws a current of 10 A at a power factor of 0,8. Determine the efficiency of the motor if it has a total loss of 25 W. (3)

1.3 Trouble-free operation of three-phase motors requires regular routine maintenance.

1.3.1 List THREE possible defects that may occur in three-phase motors. (3)

1.3.2 List FIVE checks to be carried out to ensure correct operation. (5)

1.4 Variable speed drives (VSDs) are used to control the speed of AC motors as well as the torque produced by these motors.

Name FOUR methods how this is achieved. (4)

[20]

QUESTION 2

2.1 Draw a neat, labelled circuit diagram of a two-speed motor control circuit (Dahlander circuit). (8)

2.2 State the function of the following electrical elements:

2.2.1 Mechanical limit switch

2.2.2 PLC

2.2.3 Power supply

2.2.4 Three-phase motor

(4 × 1) (4)

Copyright reserved

2.3 FIGURE 1 below shows the basic momentary and maintained control circuits.

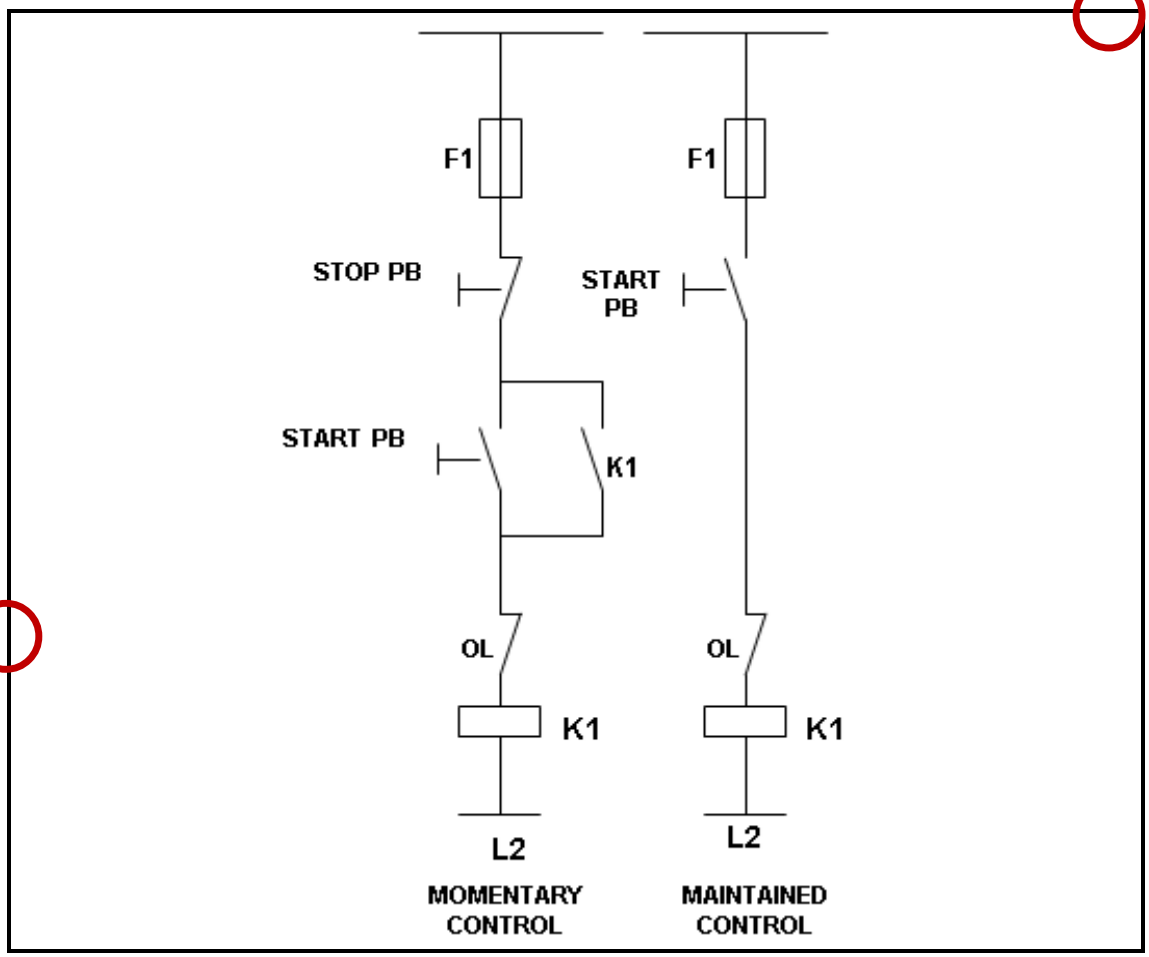

FIGURE 1

With reference to these circuit diagrams, briefly explain the circuit operation of the following:

2.3.1 Maintained control circuit (3)

2.3.2 Momentary control circuit (5)

[20]

QUESTION 3

3.1 Couplings used for any application must be 100% aligned so that there are no deviations in the horizontal or vertical position, otherwise the bearings will wear out quickly and thus cause damage to the motor.

Give a brief explanation of how alignment will be done in the following couplings:

3.1.1 Belt drive (3)

3.1.2 Chain drive (3)

3.1.3 Gear drive and direct connection (2)

3.2 Various speed-control techniques are used by modern VSDs, and they are classified into three major categories.

Choose an item from COLUMN B that matches a description in COLUMN A. Write only the letter (A–C) next to the question number (3.2.1–3.2.3) in the ANSWER BOOK.

COLUMN A		COLUMN B	
3.2.1	In this type of control, a microcontroller feeds the motor with variable frequency signals generated by the PWM control from an inverter	A	direct torque control (DTC)
		B	vector control
		C	scalar control
3.2.2	This control is also known as field-oriented control or flux-oriented control or indirect torque control		
3.2.3	With this method, there is no fixed switching pattern; instead, it switches the inverter according to the load needs		

(3 × 1) (3)

3.3 As an apprentice, you are tasked to replace a faulty single-phase electric motor.

List FIVE tools you would require to successfully complete the task. (5)

Copyright reserved

3.4 FIGURE 2 below represents an emergency-stop circuit controlling a motor.

Explain the operation of this circuit after the emergency-stop button has been pressed. (2)

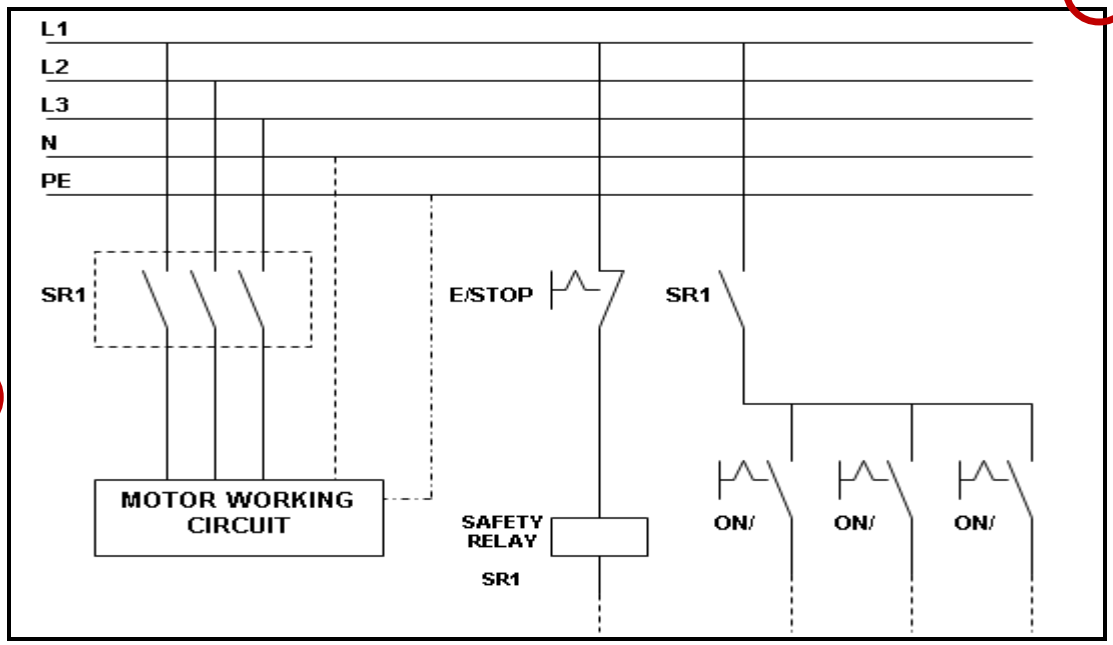

FIGURE 2

3.5 FIGURE 3 below shows three different types of emergency-stop buttons.

State where and why the latching key type is used. (2)



FIGURE 3

[20]

QUESTION 4

4.1 Ladder logic diagrams are the most popular type of programming language used with PLCs.

Name THREE other programming languages. (3)

4.2 Refer to the circuit diagram in FIGURE 4 below and convert the control circuit into a PLC ladder program.

NOTE: Include TWO indication lamps in your program to indicate the direction of the motor. (10)

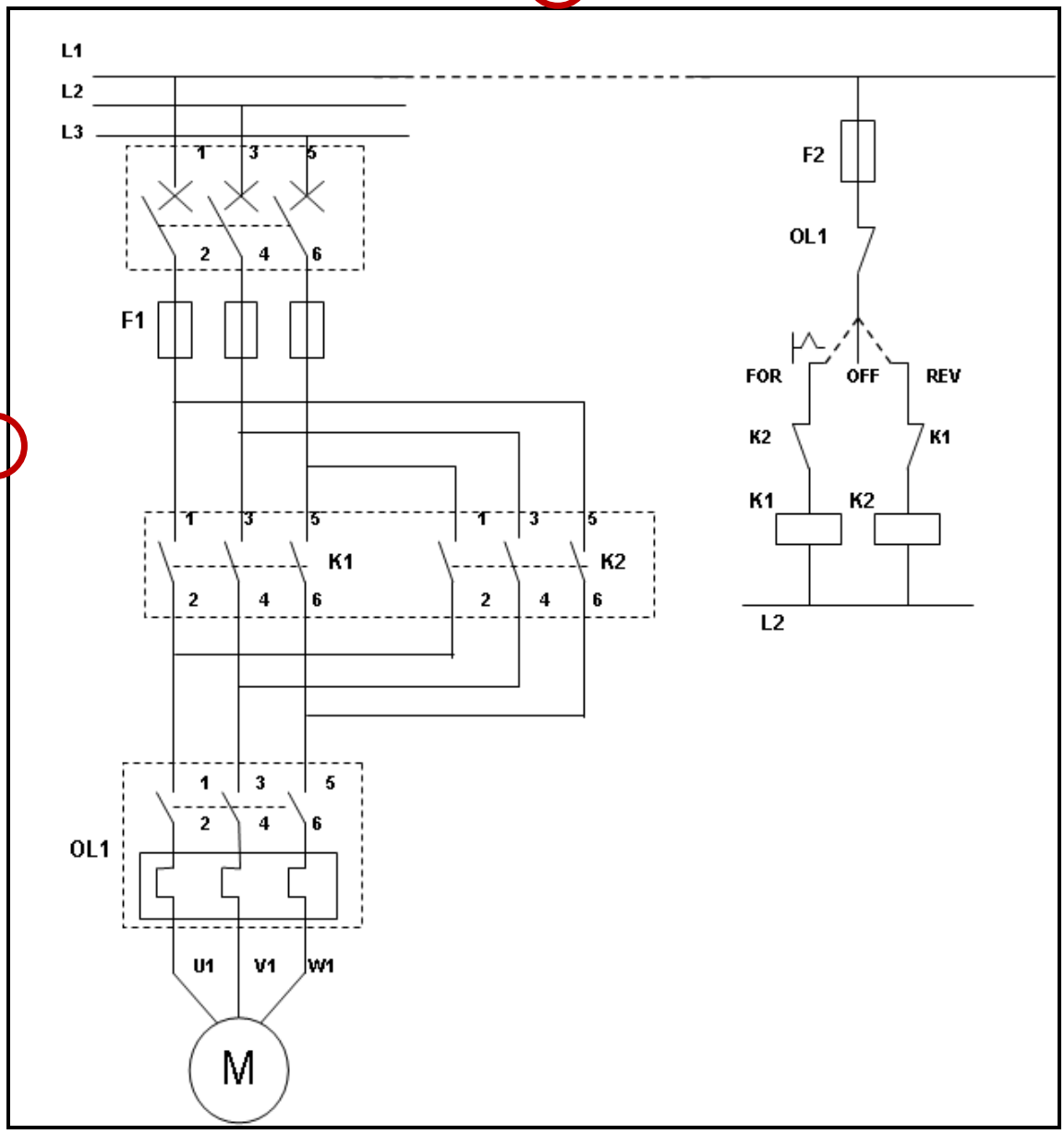

FIGURE 4

4.3 Draw a PLC wiring diagram to show how the system described in QUESTION 4.2 above will be connected to a PLC. (7)

[20]

QUESTION 5

5.1 Indicate whether the statements given below are TRUE or FALSE by writing only 'True' or 'False' next to the question number (5.1.1–5.1.5) in the ANSWER BOOK.

5.1.1 To be able to effectively prevent disturbance through the air, all parts of the power-drive system should form a Faraday cage against radiated emissions. The installation of a PDS includes cabinets, auxiliary boxes, cabling and motors.

5.1.2 Conductive emissions can be reduced by using an AC or DC choke.

5.1.3 Lock-out, tag-out (LOTO) procedures are there to improve human safety and lower risks when working on industrial equipment.

5.1.4 Predictive maintenance, also known as active maintenance, is implemented only when a system failure occurs resulting in production loss; it requires a large maintenance budget.

5.1.5 An earth continuity test is carried out to ensure that there is continuity between the earth terminal and the exposed metallic portion of electrical equipment. In this test, the resistance should be low – if the resistance reading is high, it indicates that there is poor earth evident.

(5 × 1) (5)

5.2 Make a neat sketch to show how you would perform the insulation resistance test between the windings and earth on a three-phase motor. (3)

5.3 List THREE daily recommended maintenance routine checks for electric motors. (3)

5.4 Factors such as temperature, pollution, wear, and tear as well as metal fatigue play an important role with regard to the operation or functioning of electric motors.

Briefly describe each of the following factors:

5.4.1 Pollution

5.4.2 Fatigue

5.4.3 Wear and tear

(3 × 3) (9)

[20]

TOTAL: 100

Copyright reserved