higher education & training

Department:
Higher Education and Training
REPUBLIC OF SOUTH AFRICA

MARKING GUIDELINE

NATIONAL CERTIFICATE (VOCATIONAL)

ELECTROTECHNOLOGY
NQF LEVEL 4

10 November 2022

This marking guideline consists of 7 pages.

Copyright reserved

QUESTION 1

1.1 1.1.1 The current (I) drawn by the motor when full-load torque and power has been reached

1.1.2 The frequency (f) at which the motor has been designed to operate

1.1.3 Efficiency is the ratio between the output power and that of the input power expressed as a percentage

1.1.4 Motor speed under full-load conditions

1.1.5 The power (*P*) rating for operation at sea level

(5 × 1) (5)

1.2 $Pin = Po + Losses$

$Pin = (VI\ \cos\theta) + Losses$

$Pin = (380 \times 10 \times 0{,}8) + 25$

$Pin = 3040 + 25$

$= 3\,065\ W$ ✓

$Efficiency = \frac{Po}{Pin}\ x\ 100$

$Efficiency = \frac{3040}{3065}\ x\ 100$ ✓

$= 99{,}184\ \%$ ✓ (3)

1.3 1.3.1
- Insulation failure
- Rotor-bar failure
- Mechanical problems (3)

1.3.2
- Check the alignment of the directly coupled motor
- Check the belt and belt tension of a belt-coupled motor
- Check the motor for overheating
- Check air vents or filters
- Check to see if there is dampness inside the motor – let it run to dry
- Check and lubricate bearings regularly
- Check for abnormal noise
- Check for excessive vibrations
- Keep the motor free of dirt and oil (Any 5 × 1) (5)

1.4
- Stator-voltage control
- Supply-frequency control
- Rotor-resistance control
- Pole changing (4)

[20]

QUESTION 2

2.1

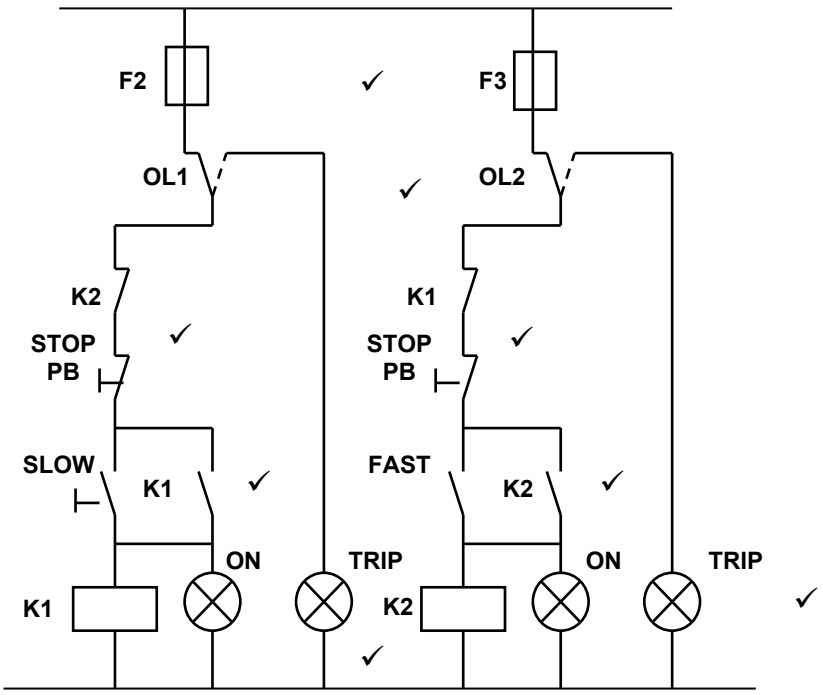

(8)

2.2 2.2.1 The mechanical limit switch is used to determine position with physical contact.

2.2.2 PLC is used to monitor and control an automated application.

2.2.3 Power supply is used to convert high-voltage AC to DC voltage at either a higher or lower voltage.

2.2.4 Three-phase motors convert electrical energy into mechanical energy.

(4 × 1) (4)

2.3 2.3.1
- The Start/Stop button is depressed.
- The coil K1 is energised over the closed contact OL of the overload relay contactor.
- The motor will run as long as the indented Stop/Start switch is closed. (3)

2.3.2
- A Start push button is depressed.
- This energises the control coil K1 that is sustained by contact K1 in the latched-on position.
- The Start push button needs only be activated momentarily and can then be released.
- The motor will continue to run over the control relay contacts until the Stop push button is activated.
- This de-energises the control coil (K1), the control-coil contacts open and the motor is turned off. (5)

[20]

QUESTION 3

3.1 3.1.1 Align the pulleys so that the belt will run true.✓ Tighten the belt just enough to prevent slippage;✓ any tighter will cause premature bearing failure. If possible, the lower side of the belt should be the driving side.✓ (3)

3.1.2 Mount the sprocket on the shaft as close to the bracket as possible.✓ Align the sprockets so that the chain will run true.✓ Avoid excessive chain tension.✓ (3)

3.1.3 Accurate ✓alignment is essential. ✓ (2)

3.2 3.2.1 C
3.2.2 B
3.2.3 A
(3 × 1) (3)

3.3
- Screwdriver
- Correct-size spanner
- Wire stripper
- Crimping tool
- Electrician's plier (5)

3.4 If the E-STOP is pressed, the safety relay SR1 will de-energise, opening the N/O contacts of the SR1 relay✓ and cutting of the power flow to the relative circuits.✓ (Any other relevant answer) (2)

3.5 The latched key E stop will be used for applications where supervisory control is needed. ✓Only certain staff will be allowed to reset this circuit. ✓ (2)

[20]

QUESTION 4

4.1
- Function block
- Structured text
- Sequential function chart
- Instruction list

(Any 3 × 1) (3)

4.2

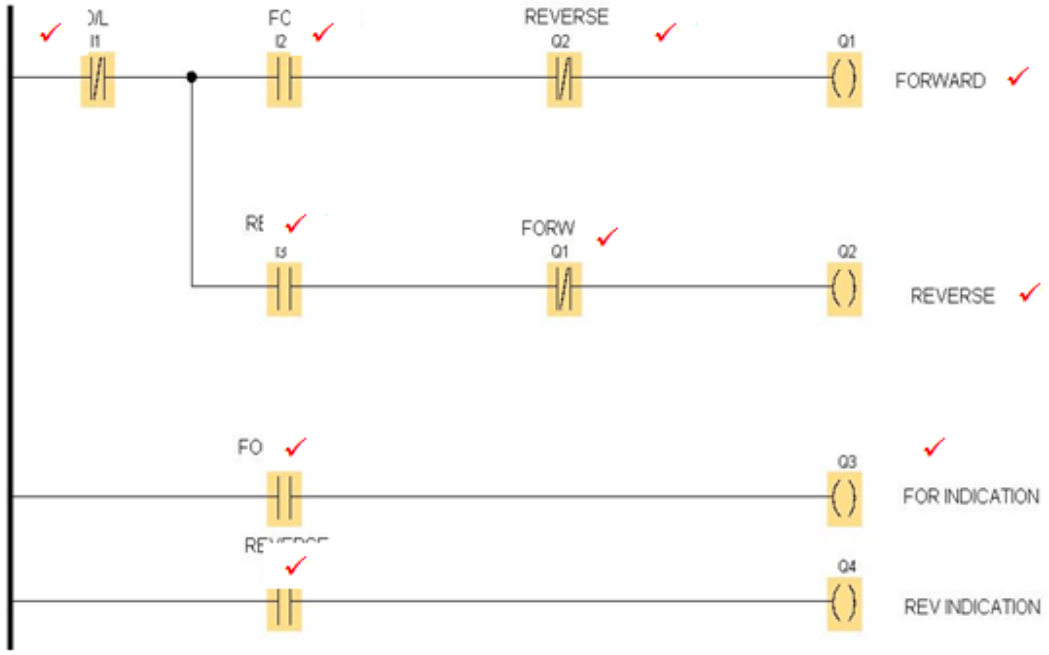

(10)

4.3

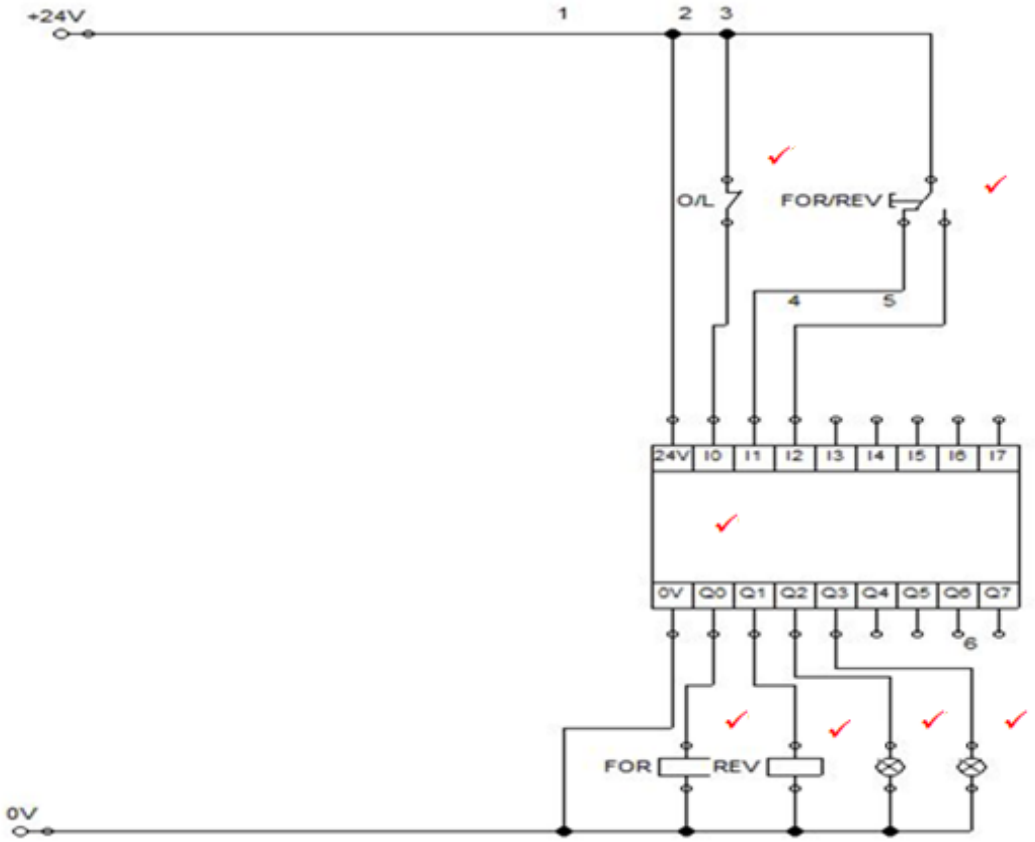

(7)
[20]

QUESTION 5

5.1 5.1.1 True
5.1.2 True
5.1.3 False
5.1.4 False
5.1.5 True

(5 × 1) (5)

5.2

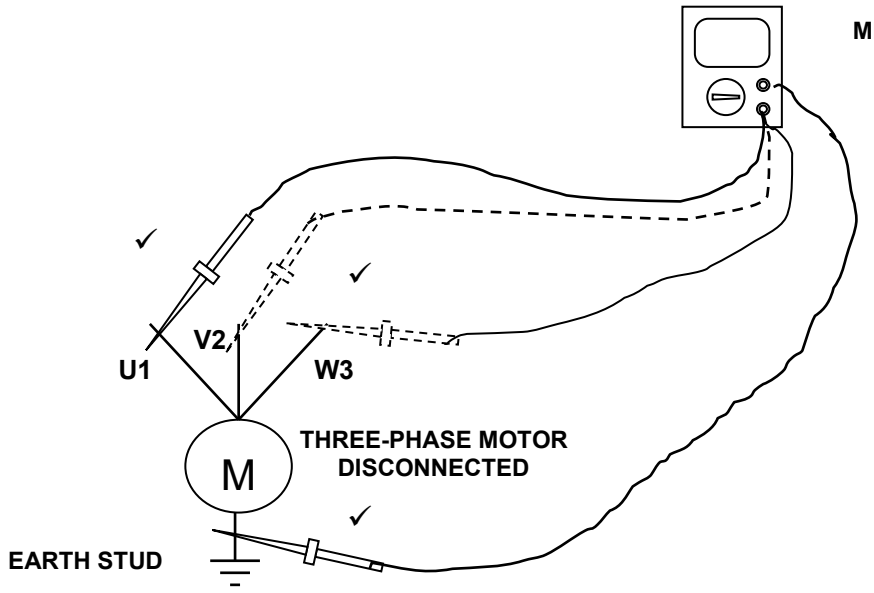

(3)

5.3
- Check for noise
- Check for bearing wear
- Check for vibrations (3)

5.4 5.4.1 The air that we breathe is not as clean as we think. It contains many fine dust particles made up of various materials.✓ These dust particles have an adverse effect on machinery and equipment✓ which can lead to machine failure over time if the ingress of pollution is not controlled.✓

5.4.2 Fatigue occurs when a material is subjected to cyclic loading (stretching) and unloading (relaxing).✓ If the loads are above a certain threshold, microscopic cracks will begin to form at the surface. Eventually, a crack will reach a critical size and the structure will suddenly fracture.✓ The shape of the structure will significantly affect the fatigue life; square holes or sharp corners will lead to elevated local stresses where fatigue cracks can initiate. Round holes and smooth transitions or fillets are therefore important to increase the fatigue strength of the structure.✓

Copyright reserved

5.4.3 Machinery that incorporates electric motors is subject to wear and tear. However, it should have a life span of up to ten years or more if the manufacturers' maintenance procedures are followed.✓ Wear and tear occurs due to the load that is placed on the electric motor and its subassemblies✓ as a result of the thrust in changing directions, the inertia at start-up, metal fatigue and a lack of maintenance.✓

(3 × 3) (9)
[20]

TOTAL: 100

Copyright reserved