higher education & training

Department:
Higher Education and Training
REPUBLIC OF SOUTH AFRICA

NATIONAL CERTIFICATE (VOCATIONAL)

ELECTROTECHNOLOGY
NQF LEVEL 2

(12040212)

10 November 2022 (Y-paper)
13:00–16:00

Calculators may be used.

This question paper consists of 7 pages and 1 formula sheet.

223Q1N2210

Copyright reserved

TIME: 3 HOURS
MARKS: 100

INSTRUCTIONS AND INFORMATION

1. Answer all the questions.
2. Read all the questions carefully.
3. Number the answers according to the numbering system used in this question paper.
4. Start each section on a new page.
5. Use only a blue or black pen.
6. Write neatly and legibly.

Copyright reserved

QUESTION 1

1.1 Choose the correct word from COLUMN B to complete the statement in COLUMN A. Write only the letter (A–E) next to the question number (1.1.1–1.1.5) in the ANSWER BOOK.

COLUMN A		COLUMN B	
1.1.1	... states that the current that flows in a circuit is proportional to the voltage and inversely proportional to the resistance as long as the temperature stays constant	A	energy
1.1.2	… is the product of the voltage and the current of a circuit	B	coulomb
1.1.3	… is defined as the quantity of electricity that flows past a given point in an electric circuit when a current of one ampere is maintained for one second	C	resistivity
1.1.4	Electric ... is the result of power developed over a certain period of time; it also has the ability to do work	D	power
1.1.5	... is the resistance per unit length of a material when the resistance is measured across two opposite sides of a cube of the material at a temperature of 20 °C, and is measured in ohm/metres (Ω.m)	E	Ohm's law

(5 × 1) (5)

1.2 Define the following terms:

1.2.1 Positive ion

1.2.2 Doping

1.2.3 Reverse bias

(3 × 1) (3)

1.3 Two capacitors with values of 1000 µF and 2000 µF respectively are connected in parallel across a 24 V, 50 Hz supply.

Calculate the following:

1.3.1 The capacitive reactance of the 1000 µF capacitor (1)

1.3.2 The total charge of the circuit (3)

1.4 A series circuit consists of a 5-ohm resistor, an inductor of 0,3 henry and a capacitor of 40 microfarads. If the circuit is connected across a 230 V, 50 Hz supply, calculate:

1.4.1 The impedance of the circuit (4)

1.4.2 The total current of the circuit (2)

1.4.3 The phase angle (2)

[20]

QUESTION 2

2.1 Electrical drawings can represent anything from a simple single line drawing to complex power control circuits.

Name the THREE most common types of diagrams encountered in the field. (3)

2.2 Draw a fully labelled circuit diagram of a single-phase stove subcircuit. Your diagram must include an isolator. (6)

2.3 You are required to install a 5 kW, 240 V AC motor.

Calculate the current that this motor will draw from the supply if it operates at a power factor of 0,8 lagging. (2)

2.4 Draw the IEC symbols for the following:

2.4.1 Relay coil

2.4.2 Generator

2.4.3 Double-pole isolator

2.4.4 Two-way switch

2.4.5 Transformer

(5 × 1) (5)

Copyright reserved

2.5 In South Africa, electrical installations must conform to the South African National Standards Code SANS 10142.

Complete the following regulations by writing the missing word next to the letter (a–d) in the ANSWER BOOK:

2.5.1 Regulation 6.13.2.2: (a …) systems shall be bonded together and also bonded to the (b …) system.

2.5.2 Regulation 6.13.2.3: An antenna (including a satellite dish) shall be bonded to the (c …) system by means of a conductor of at least (d …).

(2 × 2) (4)

2.6 List FIVE variables to be taken into consideration when selecting a cable for a particular application. (5)

[25]

QUESTION 3

3.1 Study the circuit in FIGURE 1 below and then answer the question.

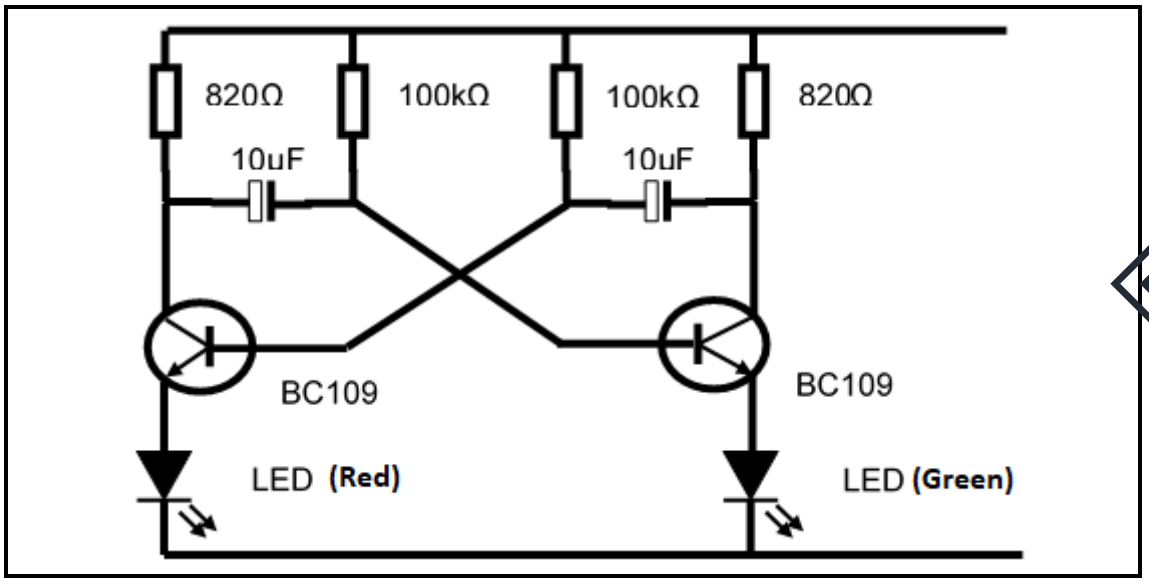

FIGURE 1

The table below contains the material list of components needed to build a stable multivibrator circuit. Copy the table in the ANSWER BOOK and fill out the blanks.

ITEM	DESCRIPTION	PART NO.	QUANTITY
1	Resistor	…	2
2	…	100 kΩ	…
3	…	10 µF	…
4	…	BC 109	…
5	…	Red	1
6	LED	…	…

(10)

Copyright reserved

3.2 List FIVE tools needed when constructing this stable multivibrator on Veroboard. (5)

3.3 Draw a labelled block diagram of the power supply unit (PSU). (6)

3.4 List FOUR common faults in relays. (4)
[25]

QUESTION 4

4.1 Indicate whether the following statements are TRUE or FALSE. Choose the answer and write only 'True' or 'False' next to the question number (4.1.1–4.1.3) in the ANSWER BOOK.

4.1.1 Preventive maintenance procedures are done because of partial equipment failure.

4.1.2 Predictive maintenance procedures are done to predict the performance of an equipment item.

4.1.3 Corrective maintenance procedures are performed routinely to extend the life of the equipment.

(3 × 1) (3)

4.2 Refer to the circuit diagram in FIGURE 2 below and then answer the questions.

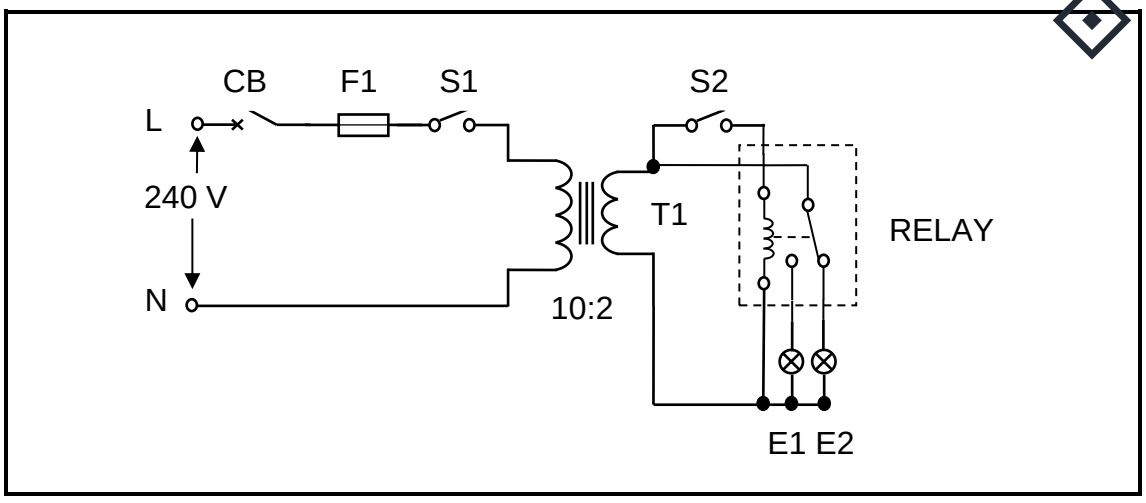

FIGURE 2

4.2.1 Is the transformer that is used in the circuit a *step-up* or *step-down* transformer? Substantiate your answer. (2)

4.2.2 What will the secondary voltage of the transformer be if the circuit breaker and S1 are in a closed position? (3)

4.3 Give a brief description of how you will perform the *continuity test* on a cable. (5)

4.4 As an apprentice, your supervisor tasked you to identify possible causes of the fault that was identified in the installation.

Name THREE things that can assist you to prioritise possible causes of this fault. (3)

4.5 Briefly explain the following troubleshooting techniques:

4.5.1 Half-cut method

4.5.2 Input-to-output technique

(2 × 2) (4)
[20]

QUESTION 5

5.1 Your company manufactures and sells light fittings.

- The cost to manufacture ONE light is R13,00.
- The factory manufactures 3 000 light fittings per month.
- The annual overhead expenses of the company are estimated to be R375 000.

If the company intends to make a profit of 10%, calculate the selling price of each unit. (7)

5.2 Employees are compelled to wear, or use prescribed personal protective equipment (PPE).

Name THREE types of PPE that employees working with electricity will need. (3)
[10]

TOTAL: 100

Copyright reserved

(12040212)

FORMULA SHEET

ELECTROTECHNOLOGY LEVEL 2

1. $\boldsymbol{P = V\ I\ Cos\phi}$

2. $Q = V\ I\ Sin\phi$

3. $\boldsymbol{S = V\ I}$

4. $\boldsymbol{V = I\ R}$

5. $P = V\ I$

6. $\boldsymbol{X_L = 2\pi\ f\ L}$

7. $X_C = \dfrac{1}{2\pi\ f\ C}$

8. $\boldsymbol{Z = \sqrt{R^2 + (X_L - X_C)^2}}$

9. $V_T = \sqrt{V_R^2 + (V_L - V_C)^2}$

10. $V_1 = \left(\dfrac{R_1}{R_t}\right) V_T$

11. $V_L = IX_L$

12. $I_T = \sqrt{I_R^2 + (I_L - I_C)^2}$

13. $tan\emptyset = \dfrac{I_L - I_C}{I_R}$

14. $Z = \dfrac{V}{I}$

15. $A = \dfrac{\pi\ d^2}{4}$

16. $R_T = R_1 + R_2 + R_3 + \cdots + R_n$

17. $\dfrac{1}{R_T} = \dfrac{1}{R_1} + \dfrac{1}{R_2} + \dfrac{1}{R_3} + \cdots + \dfrac{1}{R_n}$

18. $C_T = C_1 + C_2 + C_3 + \cdots + C_n$

19. $\dfrac{1}{C_T} = \dfrac{1}{C_1} + \dfrac{1}{C_2} + \dfrac{1}{C_3} + \cdots + \dfrac{1}{C_n}$

20. $L_T = L_1 + L_2 + L_3 + \cdots + L_n$

21. $\dfrac{1}{L_T} = \dfrac{1}{L_1} + \dfrac{1}{L_2} + \dfrac{1}{L_3} + \cdots + \dfrac{1}{L_n}$

22. $Q = C\ V$

23. $\boldsymbol{R_t = R_0(1 + \alpha t)}$

24. $\dfrac{V_1}{V_2} = \dfrac{N_1}{N_2} = \dfrac{I_2}{I_1}$

25. $\boldsymbol{I_1 = \left(\dfrac{R_2}{R_1 + R_2}\right) I_T}$

26. $V_C = IX_C$

27. $R = \dfrac{p\ l}{A}$

28. $tan\emptyset = \dfrac{X_L - X_C}{R}$

29. $E = I^2\ R\ t$

30. $n_s = \dfrac{f}{p}$

31. $E = V + I\ r$

Copyright reserved