higher education & training

Department:
Higher Education and Training
REPUBLIC OF SOUTH AFRICA

MARKING GUIDELINE

NATIONAL CERTIFICATE (VOCATIONAL)

ELECTROTECHNOLOGY
NQF LEVEL 2

10 November 2022

This marking guideline consists of 7 pages.

Copyright reserved

QUESTION 1

1.1 1.1.1 E
1.1.2 D
1.1.3 B
1.1.4 A
1.1.5 C

(5 × 1) (5)

1.2 1.2.1 A positive ion is an atom that has lost one or more electrons so that its positive charge is greater than its negative charge.

1.2.2 Doping is the process of adding impurities to pure germanium or silicon.

1.2.3 Reverse bias means the potential is applied in such a way that it opposes the flow of electrons.

(3 × 1) (3)

1.3 1.3.1 $X_C = \frac{1}{2\pi fC}$

$X_C = \frac{1}{2\pi \ x \ 50 \ x \ (1000 \ x \ 10^{-6})}$

$X_C = \ 3,184 \ \Omega$ ✓ (1)

1.3.2 $C_T = C_1 + C_2$

$C_T = 1000 + 2000$

$C_T = 3000\mu F$✓

$Q_T = C_T V$

$Q_T = (3\ 000 \ x \ 10^{-6}) \ \times 24$✓

$Q_T = 72\ 000\ \mu C$✓ (3)

1.4 1.4.1 $X_L = 2\pi fL$ $X_C = \frac{1}{2\pi f C}$

$X_L = 2\pi \ x \ 50 \ x \ 0{,}3$ $X_C = \frac{1}{2\pi \ x \ 50 \ x \ 40 \ x \ 10^{-6}}$

$X_L = 94{,}248\ \Omega$ ✓ $X_C = 79{,}577\ \Omega$✓

$Z = \sqrt{R^2 + (X_L - X_C)^2}$

$Z = \sqrt{5^2 + (94{,}248 - 79{,}577)^2}$✓

$Z = 15{,}5\ \Omega$✓ (4)

1.4.2 $I_T = \frac{V_T}{Z_T}$

$I_T = \frac{230}{15{,}5}$ ✓

$I_T = 14{,}839\ A$✓ (2)

1.4.3 $\tan\theta = \frac{X_L - X_C}{R}$

$\theta = tan^{-1}\ (\frac{94{,}248 - 79{,}577}{5})$

$\theta = 71{,}18°\ (lagging)$✓ (2)
[20]

QUESTION 2

2.1
- Circuit diagrams
- Wiring diagrams
- Block diagrams (3)

2.2

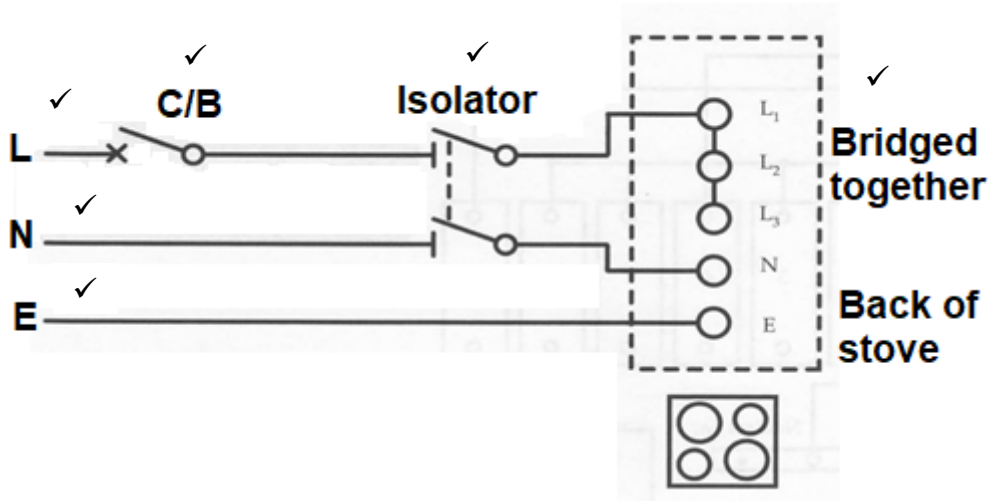

(6)

2.3 $I_T = \frac{P}{V_T COS\theta}$

$I_T = \frac{5000}{240 \times 0{,}8}$ ✓

$I_T = 26{,}042\ A$ ✓ (2)

2.4 2.4.1



2.4.2

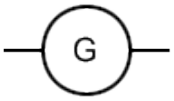

2.4.3

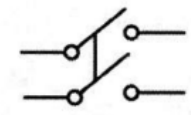

2.4.4

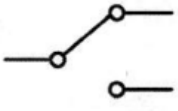

2.4.5

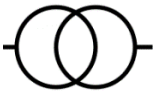

(5 × 1) (5)

2.5 2.5.1 (a) Hot and cold water
(b) earth continuity conductor

2.5.2 (c) installation earthing
(d) 2,5 mm^2

(2 × 2) (4)

2.6
- Size and type of load to be supplied
- Permissible voltage drop
- Prospective fault current
- Circuit protection
- Installation conditions (5)

[25]

QUESTION 3

3.1

ITEM	DESCRIPTION	PART NO.	QUANTITY
1	Resistor	820 Ω ✓	2
2	Resistor✓	100 kΩ	✓2
3	Electrolytic capacitor✓	10 µF	✓2
4	NPN transistor✓	BC 109	✓2
5	LED✓	Red	1
6	LED	Green ✓	✓1

(10 × 1) (10)

3.2
- Small screwdrivers
- Small side cutter
- Small long-nose pliers
- Small pliers
- Soldering iron
- Solder sucker (Any 5 × 1) (5)

3.3

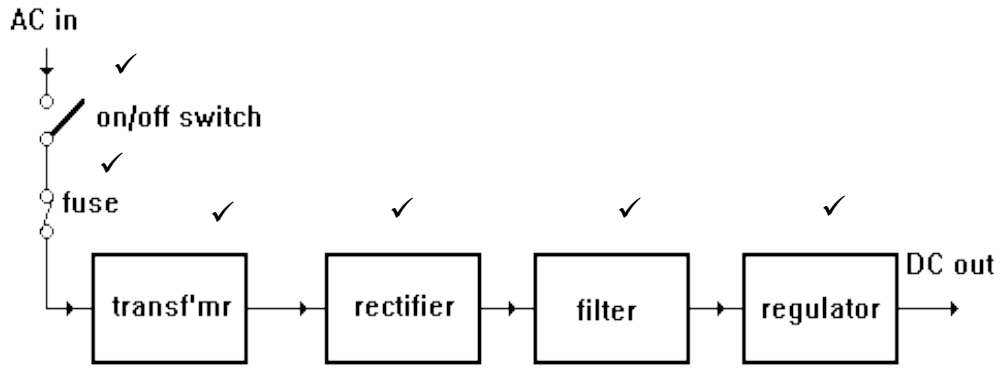

(6)

3.4
- The energiser coil becomes faulty.
- The contacts always remain in an open state.
- The contacts always remain in a closed state.
- The driver transistor to the relay becomes faulty. (4)

[25]

QUESTION 4

4.1 4.1.1 False
4.1.2 True
4.1.3 False

(3 × 1) (3)

4.2 4.2.1 Step up because of the ratio, or the primary voltage is larger than the secondary. (2)

4.2.2 $\frac{V_1}{V_2} = \frac{10}{2}$

$V_2 = \frac{240 \times 2}{10}$

$V_2 = 48\,V$ (3)

4.3
- Disconnect both sides of the cable being tested✓ and connect the cable to the two sides of a multimeter on the ohm scale.✓
- Make sure you connect the same colour wire, in other words: brown on one side, and brown on the other side of the meter.✓
- A low resistance will indicate continuity✓ while no reading will indicate an open circuit in the cable.✓ (5)

4.4
- Look for components that burn out or wear out, such as switches, fuses, relay contacts, relay coils, motors, transformers and other devices with windings. These usually generate heat and can malfunction eventually.
- Check all connections, especially the screw type. With time they can become loose and cause high resistance. A motor that vibrates is at greater risk of coming loose.
- Finally, look at areas where the wire insulation could be damaged causing short circuits. (3)

4.5 4.5.1 The half-cut method is a technique used in troubleshooting that reduces the average number of measurements✓ needed to isolate a faulty stage or component.✓

4.5.2 With the input-to-output technique, the fault is traced starting from the input✓ and then proceeding through all the stages towards the output section.✓

(2 × 2) (4)
[20]

QUESTION 5

5.1
- Total number of light fittings manufactured in 1 year = 3 000 × 12 = 36 000✓
- Cost to manufacture 36 000 light fittings = 36 000 × R13,00 = R468 000✓
- Total annual expenses = R468 000 + R375 000✓ = R843 000✓
- Cost to manufacture 1 light fitting (taking into account the overhead expenses) = R843 000 ÷ 36 000 = R23,42✓
- Profit on each light fitting = 10% of R23,42 = R2,34✓
- Selling price = R23,42 + R2,34 = <u>R25,76</u>✓ (7)

5.2
- Overall
- Safety glasses
- Safety boots
- Insulated gloves
- Hearing protection

(Any 3 × 1) (3)
[10]

TOTAL: 100

Copyright reserved