higher education & training

Department:
Higher Education and Training
REPUBLIC OF SOUTH AFRICA

MARKING GUIDELINE

NATIONAL CERTIFICATE (VOCATIONAL)

STORED PROGRAMME SYSTEMS
NQF LEVEL 4

7 November 2022

This marking guideline consists of 7 pages.

Copyright reserved

INSTRUCTIONS TO MARKERS

1. Use your discretion for all questions.
2. Please consider the language barrier.
3. Only mark questions that are grouped together as per examination instruction.
4. Ensure drawings are neat and labelled.
5. Only mark symbols that are drawn to the IEC standards.
6. Ensure terminal numbering is shown where required.
7. Use only a red pen.
8. Ensure the script is totalled up correctly.

Copyright reserved

QUESTION 1

1.1 Telemetry systems are an alternative method of transmitting data from the rotating assembly to the stationary data acquisition system. (2)

1.2
- Transducer (input device)
- Medium of transmission (usually radio waves)
- Equipment for receiving and processing the signal
- Recording or display equipment (4)

1.3

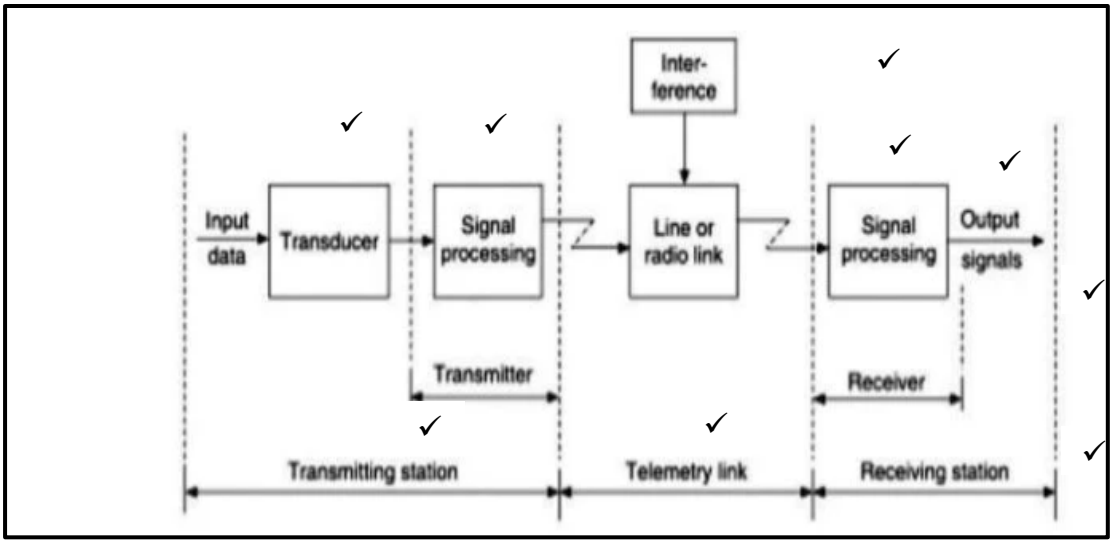

[Source: *slidetodot.com*]

✓ (Mark for showing arrows/flow)
(Discretion to be used when marking)
(10 × 1) (10)

OR

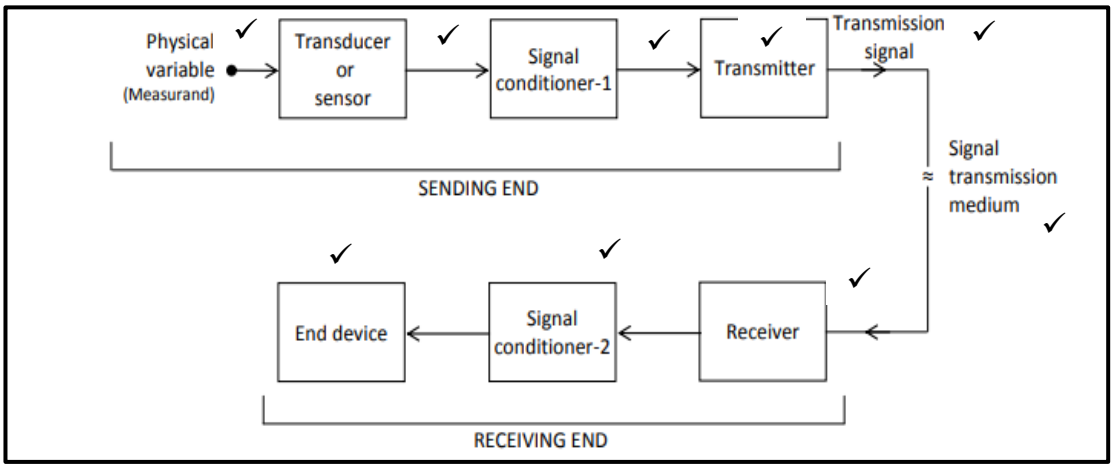

[Source: *wordpress.com*]

✓ (Mark for showing arrows/flow)
(10 × 1) (10)

1.4
- Amplitude modulation telemetry (AM)
- Frequency modulation telemetry (FM)
- Pulse modulation telemetry (PM)
- Pulse amplitude modulation telemetry (PAM)
- Pulse code modulation telemetry (PCM) (Any 4 × 1) (4)

[20]

QUESTION 2

2.1
- Speed – Because of the reduced wiring expenditure, fieldbus systems can be planned and installed more quickly.
- Reliability – Short signal paths increase the availability as well as the reliability of the systems.
- Interference reliability – Fieldbuses offer increased protection against interference, especially in the case of analogue values.
- Uniformity – Because of standardised bus protocols and unified connection technology, equipment from different manufacturers can be used and exchanged.
- Flexibility – Even expansions and changes can be executed easily and quickly with fieldbuses. (5 × 2) (10)

2.2
- The most significant design rule for the Ethernet is that the round-trip propagation delay in one collision domain must not exceed 512-bit times.
- This is a requirement for collision detection to work correctly.
- This rule means that the maximum round-trip delay for a 10 Mbps Ethernet network is 51,2 microseconds. (3)

2.3
- Local or network configuration errors
- Incorrectly configured DNS settings
- Inefficiently configured routing tables, or router faults
- Inferior, damaged, or disconnected cabling
- Overloaded servers
- Network congestion
- Server, or power failures (7)

[20]

Copyright reserved

QUESTION 3

3.1
- HMI is any device that acts as a link between the operator and the machine.
- It is an interface between the user and the machine. (Any 1 × 1) (1)

3.2

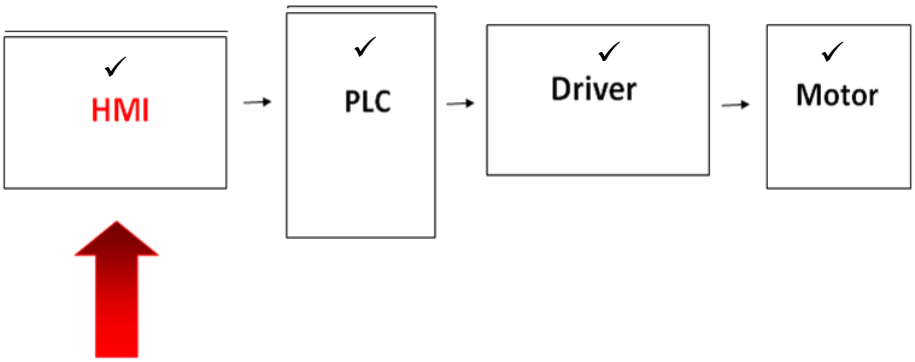

(4)

3.3
- The Push Button Replacer – takes the place of LEDs, On/Off buttons, switches or any mechanical device that performs a control function. The elimination of these mechanical devices is possible because the HMI can provide a visual representation of all these devices on its LCD screen, while performing all the same functions.
- The Data Handler – is used for applications that require constant feedback and monitoring. Often these data handlers come equipped with large capacity memories.
- The Overseer – because it works with SCADA and MES. These are centralised systems that monitor and control entire sites or complexes of large systems spread out over large areas. An HMI is usually linked to the SCADA system's databases and software programs to provide trending, diagnostic data, and management information. (3 × 2) (6)

3.4
- For use in a warehouse that has excessive noise or vibration, one might decide on a heavy-duty HMI.
- If used in the food-processing industry or somewhere that might need to be washed down, select a water-protected HMI.
- Consider temperature as a factor in the selection process. If used in a steel plant, next to a furnace, one would want something that can withstand extreme temperatures. (3 × 2) (6)

3.5
- Converting hardware to software
- Eliminating the need for mouse and keyboard
- Allowing kinaesthetic computer/human interaction (3)

[20]

QUESTION 4

4.1 Pictorial diagram – the external appearance of a component as connected in an installation.

Sequence diagram – a diagram defining the sequence of events that result in desired outcomes. (2)

4.2

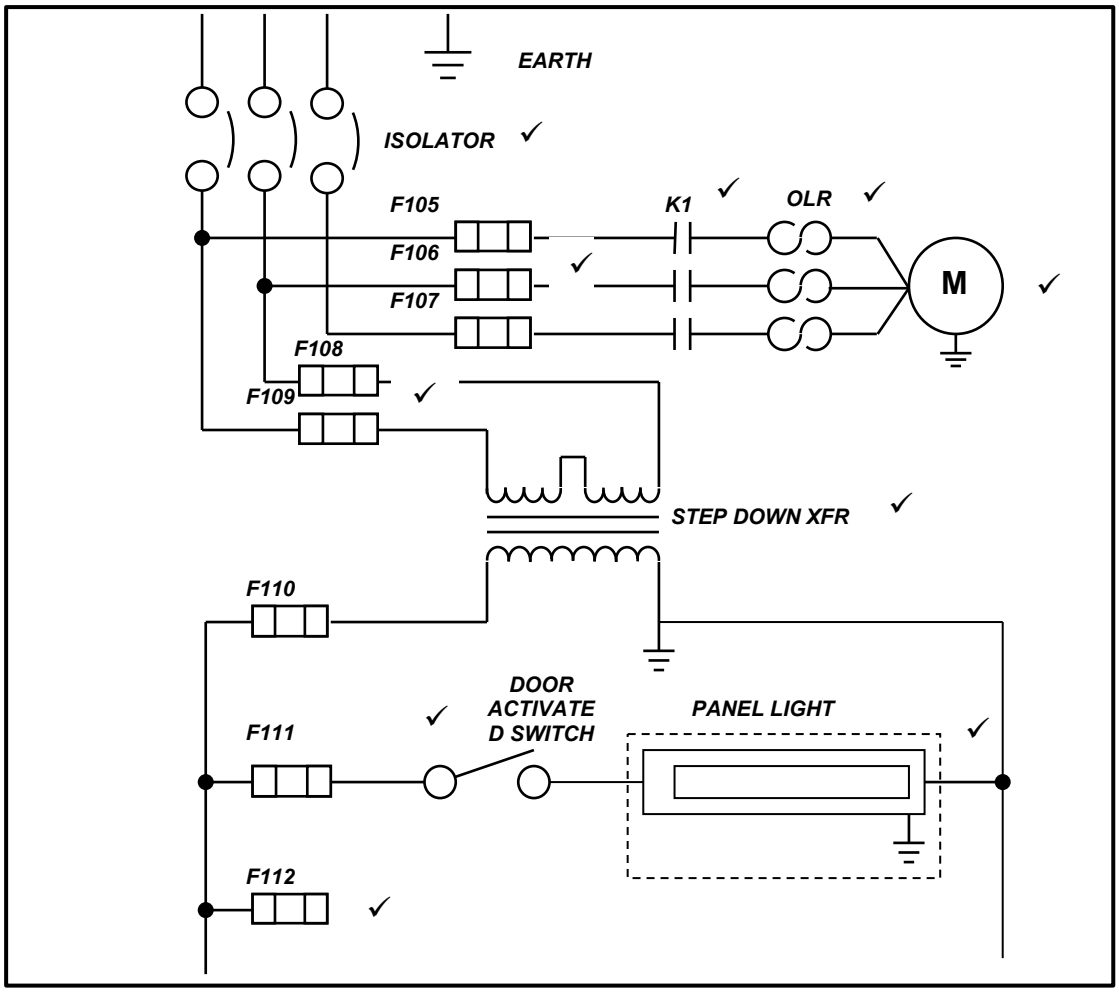

[Source: *Pathways Stored Programme Systems* by Trevor Lotz]

(10 × 1) (10)

4.3 Electromagnetic interference (EMI) is a phenomenon that may occur when an electronic device is exposed to an electromagnetic (EM) field. (2)

4.4 The colour code is used to distinguish circuits, to identify voltage classes, to note wiring polarity at installation, and to note the phases. (2)

4.5
4.5.1 Supplies (AC/DC) – Red
4.5.2 Returns (neutral and negative DC) – Black
4.5.3 AC outputs – Orange
4.5.4 DC outputs – Blue

(4 × 1) (4)
[20]

QUESTION 5

5.1
- To ensure that automation equipment and devices are protected from serious damage, failure, and even potential risk to users.
- To provide current-carrying capability that can accept ground fault current without creating a fire or explosive hazard. (2 × 2) (4)

5.2

	TEST OUTLET FOR PROPER GOUNDING USING MULTIMETER:	YES	NO
1.	The multimeter's probes are connected to the main body of the meter.✓		
2.	The multimeter is turned to the highest AC voltage range available.✓		
3.	Two test leads are inserted into the hot and neutral parts of the outlet.✓		
4.	The black lead is removed and put in the ground outlet.✓		

(One mark for drawing check list ✓)
(5 × 1) (5)

5.3 **Periodic Maintenance Workflow:**

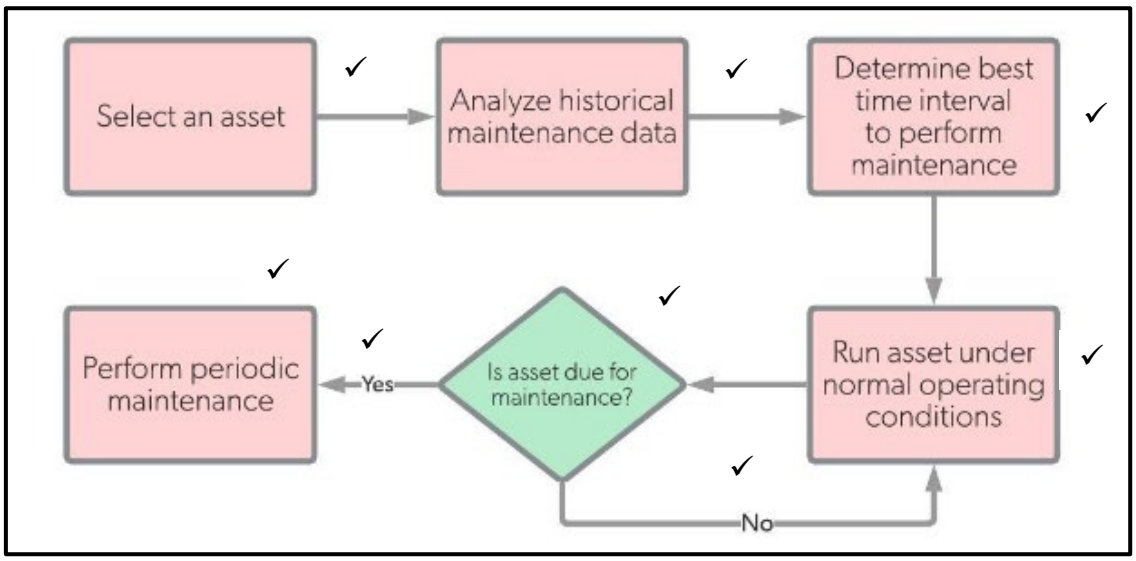

[Source: www.onupkeep.com]

(8 × 1) (8)

5.4
- Was it necessary or appropriate?
- The timing and standard
- The time frame of the planned maintenance work (3)

[20]

TOTAL: 100

Copyright reserved