higher education & training

Department:
Higher Education and Training
REPUBLIC OF SOUTH AFRICA

NATIONAL CERTIFICATE (VOCATIONAL)

PROCESS TECHNOLOGY
NQF LEVEL 4

(6050364)

10 November 2022 (X-paper)
09:00–12:00

This question paper consists of 7 pages.

251Q1N2210

Copyright reserved

TIME: 3 HOURS
MARKS: 100

INSTRUCTIONS AND INFORMATION

1. Answer all the questions.
2. Read all the questions carefully.
3. Number the answers according to the numbering system used in this question paper.
4. Use 3,14 for the value of π
5. Start each section on a new page.
6. Use only black or blue pen.
7. Write neatly and legibly.

Copyright reserved

SECTION A

QUESTION 1

Various options are provided as possible answers to the following questions. Choose the correct answer and write only the letter (A–D) next to the question number (1.1–1.5) in the ANSWER BOOK.

1.1 The build-up of unwanted material on a solid surface is called **. . . . . .**

A corrosion
B fouling
C leakage
D weeping

1.2 The calandria component is found in the … evaporator.

A rising film
B falling film
C agitated
D flash

1.3 Which ONE the following types of condensers is NOT a type of indirect condenser?

A Fin fan
B Shell and tube
C Extended surface plate
D Tray

1.4 One mole contains **…** particles.

A $6{,}022 \times 10^{23}$
B $6{,}022 \times 10^{32}$
C $6{,}022 \times 10^{-23}$
D $6{,}022 \times 10^{30}$

1.5 When work is put into the system, it has a … value.

A positive
B neutral
C negative
D zero

(5 × 3) **[15]**

Copyright reserved

QUESTION 2

Choose the correct word from those given in brackets. Write only the word next to the question number (2.1–2.5) in the ANSWER BOOK.

2.1 (Desalination / Distillation) is the process where salt is removed from water.

2.2 In the spray-type condenser, vapour is introduced from the (bottom / top).

2.3 The section in the distillation column where more volatile component is carried off by the down-flowing liquid is called (stripping / rectification).

2.4 (Mass / Weight) is a measurement that has only magnitude.

2.5 A process in which gas changes into a solid is known as (deposition/sublimation).

(5 × 1) **[5]**

QUESTION 3

Indicate whether the following statements are TRUE or FALSE. Choose the correct answer and write only 'True' or 'False' next to the question number (3.1–3.10) in the ANSWER BOOK.

3.1 Decantation is also used to separate mixtures of liquids and insoluble solids.

3.2 Excessive corrosion does not affect the decanters.

3.3 A closed system does not have a boundary that closes it off from its surroundings.

3.4 The flow of material through a closed system implies that there is an input and output of materials.

3.5 Mass is always equal to weight.

3.6 A chemical equation represents a real chemical reaction.

3.7 If heat is lost from the system, the wasted heat is treated as positive.

3.8 Energy can be introduced to a system in the form of heat, work and mass flow.

3.9 The specific heat capacity is a ratio of heat transferred to an object or system through the change in temperature of the system.

3.10 Heat always flows from a body with high temperature to the one with a low temperature.

(10 × 1) **[10]**

TOTAL SECTION A: 30

Copyright reserved

SECTION B

QUESTION 4

4.1 Coils are used as heating elements in a heat exchanger and come in different shapes and sizes.

Differentiate between *smaller* and *larger* coils in terms of their function.

(2 × 2) (4)

4.2 Name TWO ways of preventing fouling in evaporators. (2)

4.3

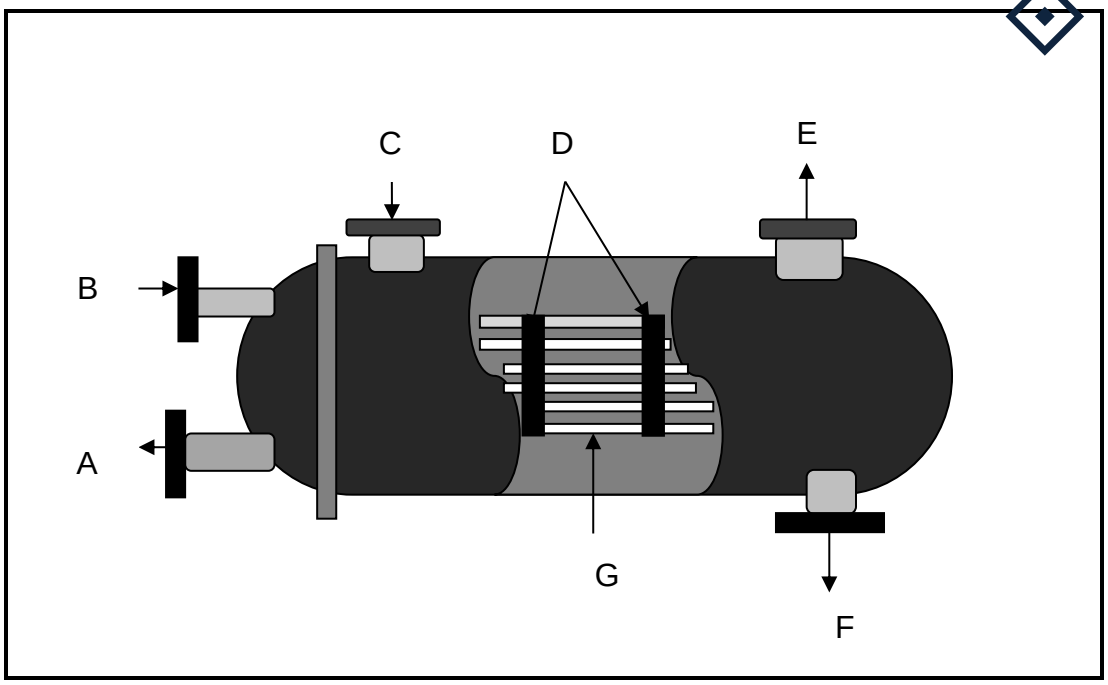

4.3.1 Which type of condenser is represented by the picture above? (1)

4.3.2 Complete the diagram by labelling the parts that are marked. Write ONLY the label next to the letter (A–G) and the question number (4.3.2) in the ANSWER BOOK.

(7 × 1) (7)

4.3.3 Explain the function of component D in the picture above. (2)

4.4 List FOUR components of absorption equipment. (4)

[20]

QUESTION 5

5.1 Describe the characteristics of a *closed system* with reference to the conservation of mass. (4)

5.2 Three (3) different ingredients are fed into a single tube with three (3) different inlets. The first ingredient X has a density of 600 kg/m^3, Y has a density of 500 kg/m^3 and the final ingredient Z has a density of 250 kg/m^3. The velocity of ingredient X is v_x = 5 m/s, the velocity of ingredient Y is v_y = 4 m/s and the velocity of ingredient Z is v_z = 1 m/s. The first two inlets to the tube have a radius of 2 m each with the third inlet having a radius of 0,5 m.

Calculate the *density* of the mixture if it flows out of a single tube with a radius of 0,4 m and at a velocity of 4 m/s. (6)

5.3 800 litres of NaCℓ are dissolved in 8 kg of water. Calculate the *volume concentration* of salt. (5)

5.4 Calculate the number of moles if 20 g of sodium hydroxide (NaOH) is used to make 3 dm^3 of sodium hydroxide solution. (5)

[20]

QUESTION 6

6.1 A piece of gold that has a mass of 400 g is cooled down, and its temperature decreases from 425 K to 315 K.

Given the specific heat capacity of gold to be 0,129 J/g/K calculate the amount of heat released by gold and explain the meaning of a negative value. (4)

6.2 Dry ice can change to gas.

6.2.1 What is this process called?

6.2.2 Explain what happens during the process named in QUESTION 6.2.1 above.

6.2.3 At what temperature and pressure conditions will the process in QUESTION 6.2.1 occur?

(3 × 2) (6)

6.3 Calculate the latent heat of vaporisation (Lv) of water with a density of 958 kg/m^3 that changes to gas, if the dimensions of the container are 5 × 3 × 2. The energy absorbed by the water is given as 6,8 MJ. (6)

6.4 Define the heat-transfer methods below:

6.4.1 Conduction

6.4.2 Convection

(2 × 2) (4)

[20]

QUESTION 7

7.1 Define the term *cation* with reference to metals consisting of atomic particles. (2)

7.2 List THREE mechanical properties of metals. (3)

7.3 Mention FIVE types of materials used in process plants. (5)

[10]

TOTAL SECTION B: 70
GRAND TOTAL: 100

Copyright reserved