higher education & training

Department:
Higher Education and Training
REPUBLIC OF SOUTH AFRICA

NATIONAL CERTIFICATE (VOCATIONAL)

WELDING
NQF LEVEL 3

(6031033)

27 November 2023 (X-paper)
09:00–12:00

Nonprogrammable calculators may be used.

This question paper consists of 6 pages.

399Q1N2327

Copyright reserved

DEPARTMENT OF HIGHER EDUCATION AND TRAINING
REPUBLIC OF SOUTH AFRICA

NATIONAL CERTIFICATE (VOCATIONAL)
WELDING
NQF LEVEL 3
TIME: 3 HOURS
MARKS: 100

INSTRUCTIONS AND INFORMATION

1. Answer all the questions.
2. Read all the questions carefully.
3. Number the answers according to the numbering system used in this question paper.
4. Use only a black or blue pen.
5. Write neatly and legibly.

Copyright reserved

QUESTION 1

Various options are given as possible answers to the following questions. Choose the answer and write only the letter (A–D) next to the question number (1.1–1.10) in the ANSWER BOOK.

1.1 The most cost-effective furnace used to produce steel:

A Electric arc furnace
B Blast furnace
C Oxygen furnace
D Induction furnace

1.2 The average temperature of steel for hot working to take place:

A 1 000 °C
B 800 °C
C 100 °C
D 500 °C

1.3 High carbon steel contains … carbon.

A 0,05% – 0,3%
B 0,3% – 0,6%
C 0,3% –1,70%
D 0,3% – 2,0%

1.4 Prevents stainless steel from rusting:

A Carbon
B Iron
C Chromium
D Silicon

1.5 Intermittent welding prevents …

A porosity.
B slag inclusion.
C lack of fusion.
D distortion.

1.6 A fillet weld is a … weld.

A square
B flat
C round
D triangular

1.7 A welding defect that forms holes in a weld:

A Distortion
B Porosity
C Fusion
D Bending

1.8 Disadvantage of metal inert gas (MIG) welding:

A Not easily automated
B Difficult to use
C Cannot take place in windy conditions
D Low deposit rate

1.9 Electrodes used for tungsten inert gas welding are made from …

A brass.
B copper.
C tungsten.
D steel.

1.10 Increasing the strength and penetration of the weld:

A Bevelling
B Hot-working
C Pre-heating
D Rapid cooling

(10 × 1) **[10]**

QUESTION 2

2.1 FIGURE 1 below shows a close up view of a shielded metal arc welding (SMAW) process. Label the diagram by writing down the answer next to the question number (A–I) in the ANSWER BOOK.

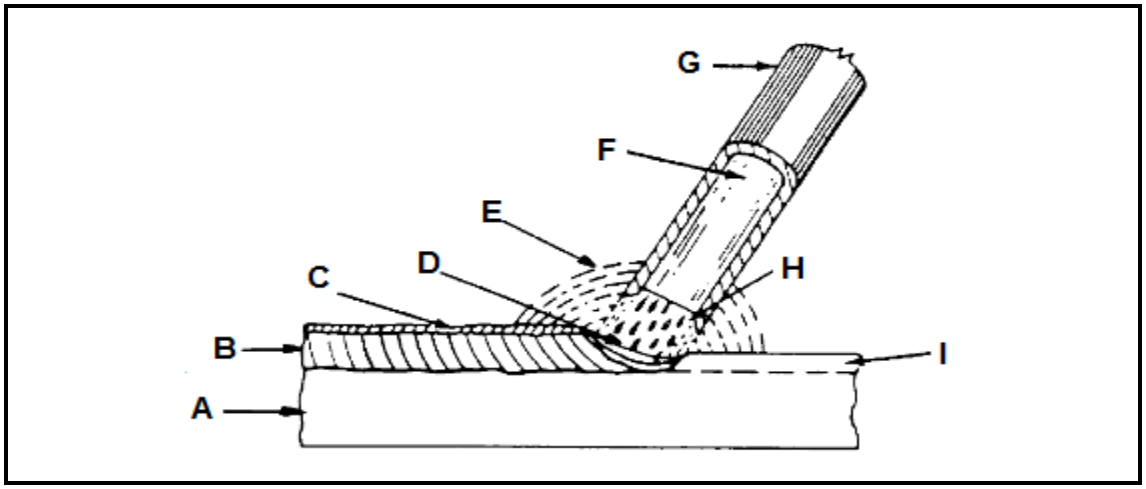

FIGURE 1

(9 × 1) (9)

2.2 List FOUR problems that can be caused by using damp welding rods during the SMAW process. (4)

2.3 Give a solution to resolve the issue of damp welding electrodes. (2)

2.4 List FOUR welding hazards that have to be attended to in terms of safety precautions and the Occupational Health and Safety Act. (4)

2.5 List SIX points to consider when doing a visual inspection of a completed weld. (6)
[25]

QUESTION 3

3.1 Explain the oxyacetylene gas welding process. (6)

3.2 State the function of a flashback arrester. (2)

3.3 List the FIVE steps that must be taken in preparing the welding environment. (5)

3.4 FIGURE 2 below shows different welding defects. Identify each defect and give the corrective action that must be taken to remedy the defect. Write your answer next to the letter (A–C) in the ANSWER BOOK.

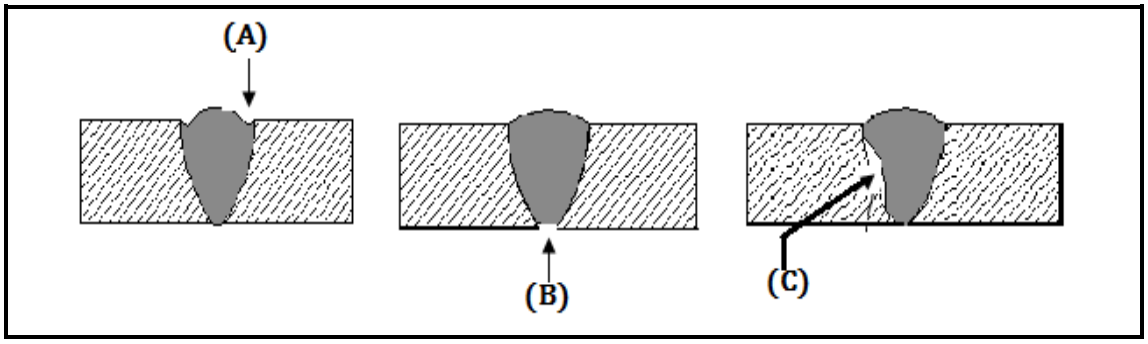

FIGURE 2

(2 + 3 + 2) (7)
[20]

QUESTION 4

4.1 State the characteristics that welding wire should display during and after gas tungsten arc welding (GTAW). (6)

4.2 List FIVE advantages of GTAW. (5)

4.3 List SEVEN common welding defects that occur during GTAW. (7)

4.4 State the precautions that must be taken to store the following welding equipment:

4.4.1 Shielding gas cylinders (3)

4.4.2 Electrodes (2)

4.4.3 Filler rods (2)

[25]

QUESTION 5

5.1 List FIVE personal protective equipment required for welding. (5)

5.2 Draw a neat sketch of the following welding bevels:

5.2.1 A single bevel joint

5.2.2 A double bevel joint

5.2.3 A V-joint

5.2.4 A double V-joint

(4 × 2) (8)

5.3 Calculate the amperage required to weld a 5-mm plate.

NOTE: 0,0254 mm = 1 A (5)

5.4 State the consequences if the wire speed is too slow during MIG welding. (2)

[20]

TOTAL: 100

Copyright reserved