higher education & training

Department:
Higher Education and Training
REPUBLIC OF SOUTH AFRICA

MARKING GUIDELINE

NATIONAL CERTIFICATE (VOCATIONAL)

RENEWABLE ENERGY TECHNOLOGIES
NQF LEVEL 3

27 November 2023

This marking guideline consists of 8 pages.

Copyright reserved

QUESTION 1

1.1
- Socioeconomic (job creation and access to hot water)
- Reduction of electrical energy demand (job creation and load reduction)
- Industrialisation (increased local manufacturing capacity) (3)

1.2
- Reduction of electrical energy consumption has not been fully achieved as the programme's focus has been on low electricity consumption areas/low-income households.
- Imported products dominated installations.
- Installations were of poor quality due to lack of appropriate skills training.
- Lack of monitoring led to unreliable verification of numbers and locations of installed systems.
- Lack of maintenance systems caused users to revert to electric systems.

(Any 3 × 1) (3)

1.3 1.3.1 False
1.3.2 True

(2 × 1) (2)

1.4
- Reduced energy bill
- Meeting hot-water needs
- Lower carbon footprint
- Lower maintenance costs and higher durability
- Can be combined with electric geysers to ensure hot water is always available
- Provides hot water during load shedding periods and shields consumer from energy price increases
- Reduces peak load demands
- Raises the resale value of property (Any 3 × 1) (3)

1.5 1.5.1 R26,500 – R7, 500 = R19,000✓✓

1.5.2 R1 × 250 kW = R250✓✓

1.5.3 R19,000 ÷ R250 = 76 months = about 2 years✓✓

(3 × 2) (6)

1.6 1.6.1
- Take care of yourself and others.
- Follow precautions and rules about safety and health.
- Learn about potential hazards on site.
- Know how to report a hazard.
- Apply safe work practices. (Any ONE)

1.6.2
- Comply with safety precautions.
- Fit pipework according to correct requirements.
- Comply with legal requirements to install SWH systems.
- Make sure the erection of any SWH system does not require a roof area larger than 6 m² or 12 m². (Any ONE)

Copyright reserved

1.6.3
- Use water that has been approved by a recognised service provider (municipality).
- Water must be clean for general consumption. (Any ONE)

(3 × 1) (3)
[20]

QUESTION 2

2.1
2.1.1 potential energy
2.1.2 absorptance
2.1.3 convection
2.1.4 transmittance
2.1.5 direct irradiation
2.1.6 insolation
2.1.7 density

(7 × 1) (7)

2.2 2.2.1
- Conduction occurs when two objects or substances at different temperatures are in (direct) contact with each other.
- Heat flows from the high-temperature object or substance to the lower-temperature one until both are at the same temperature.
- Conduction is the movement of heat through a substance by the collision of atoms or molecules.
- At the place where the two objects or substances touch, the faster-moving molecules of the warmer object collide with the slower-moving molecules of the cooler object.
- As they collide, the faster molecules transfer some of their energy to the slower molecules.
- The slower molecules thereby gain more thermal energy and in turn collide with other molecules in the cooler object.
- This process continues until enough heat energy from the warmer object spreads throughout the cooler object to reach thermal equilibrium. (Any TWO)

Copyright reserved

2.2.2
- In liquids and gases, convection is usually the most efficient way to transfer heat.
- Convection occurs when warmer areas of a liquid or gas rise to the top of cooler areas in a liquid or gas.
- As this happens, the cooler liquid or gas portions take the place of the warmer areas, which have risen higher.
- Subsequently, heat is transferred to cooler areas in a continuous circulation cycle, called convection current.
- When the water at the bottom of a glass container is heated, it expands. The expanded water is less dense than the surrounding water and therefore starts to rise. In doing so, the cooler regions of the water in the upper part of the glass container, being denser, sink.
- The movement of warm and cold water is due to the difference in their densities, setting up convection currents.
- Convection currents occur only in fluids such as liquids and gases, and not in solids. This is because convection involves the bulk movement of particle fluids that carry thermal energy.

(Any TWO)

2.2.3
- Radiation is energy emitted in the form of light (electromagnetic waves and photons).
- The high temperature makes the sun a very strong source of radiation.
- Both conduction and convection require a medium (an object or a substance to transfer heat to, whereas radiation does not).
- Heat from the sun can therefore not reach Earth through either conduction or convection, because there are not enough particles in space that can transfer heat by moving around or passing on vibrations.
- Heat from the sun reaches Earth through radiation. Heat transfer through radiation is much faster than heat transfer through conduction or convection.
- Although heat transfer through radiation is invisible to the human eye, we feel heat from the Sun or another source of light on our skin (heat sensors), even though we are not touching it. Another detector for heat is a thermometer. (Any TWO)

(3 × 2) (6)

2.3 2.3.1
- On homes with flat or low-pitched roofs
- Collectors mounted on a structural frame ensuring ideal inclination
- Structural connections between collectors and the frame and between the frame and building must be adequate to resist wind loads (Any TWO)

2.3.2
- Separates or slightly elevates the collector from the roof surface, allowing air and rain to pass underneath the collector
- Minimises problems of mildew and water retention
- Must have adequate structural properties
- Used to optimise collector inclination angles (Any TWO)

2.3.3
- Collectors mounted directly onto the roof surface
- Requires a waterproof membrane that will cover the roof sheathing
- Roof surface, collectors' structural attachment and waterproof flashing built around the collector
- Weatherproof seal placed and maintained between collector and roof to avoid leaks and rotting (Any TWO)

(3 × 2) (6)

2.4
- Suitability of roof
- Roof pitch
- Proximity
- Pipe insulation
- Water quality
- Frost protection (Any 4 × 1) (4)

2.5
- Remove the source of the shading by pruning or removing trees.
- Move the collectors higher up on the roof or another part of the roof.
- Add additional collectors to compensate for the effect of shading. (3)

2.6
- Silver
- Copper
- Gold (3)

2.7
- Allows for water to expand when heated without the pressure-relief valve leaking
- Prevents water loss in closed systems
- Absorbs variations in pressure and volume in a closed system caused by changes in temperature (Any ONE) (1)

[30]

QUESTION 3

3.1 Use safety nets/mesh✓ before the roof is laid.✓ (2)

3.2
3.2.1 hazards
3.2.2 competent
3.2.3 scaffolds
3.2.4 firm

(4 × 1) (4)

3.3

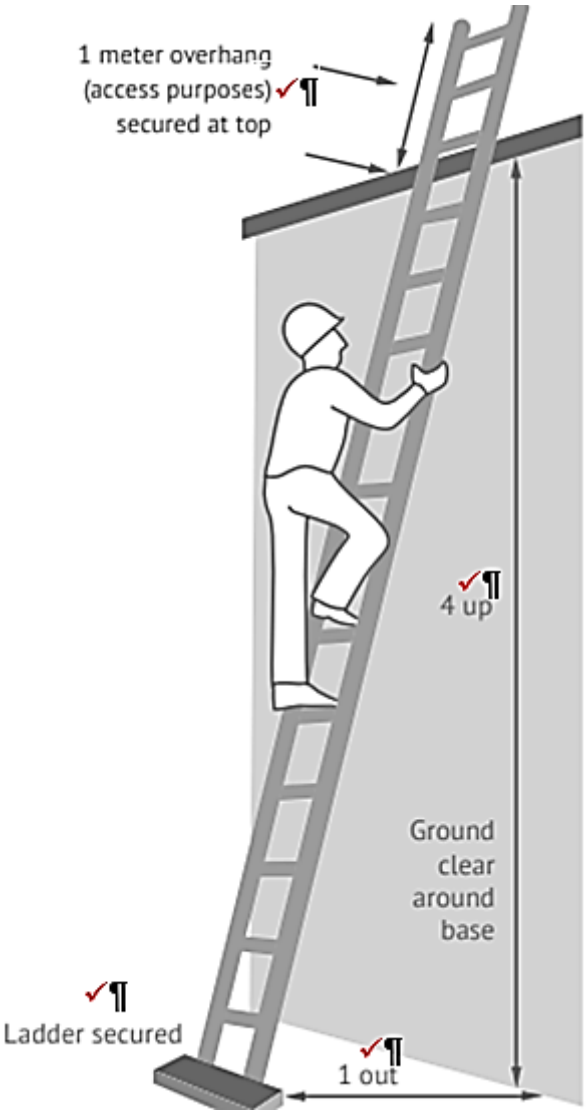

(4)

3.4 A harness system enables a person to be positioned✓ and safely supported✓ at a work location for the duration of the task being undertaken at height.✓ Harness systems are thus used to gain access✓ to and work at a workface where there is a risk of falling.✓ (5)

[15]

QUESTION 4

4.1

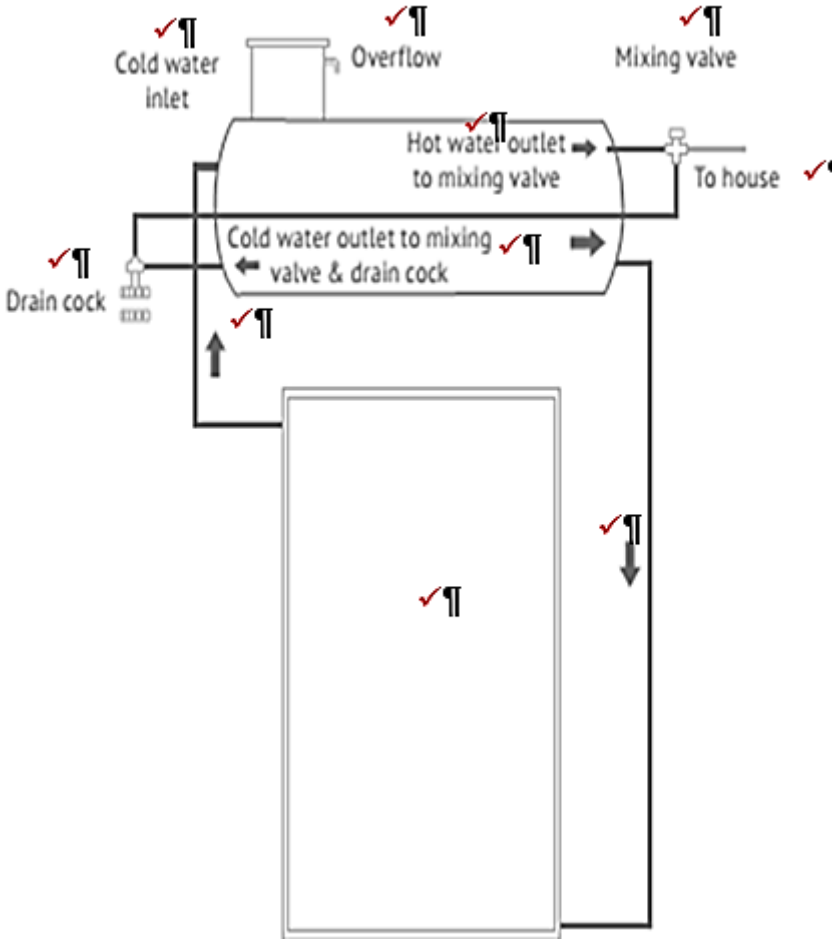

(10)

4.2

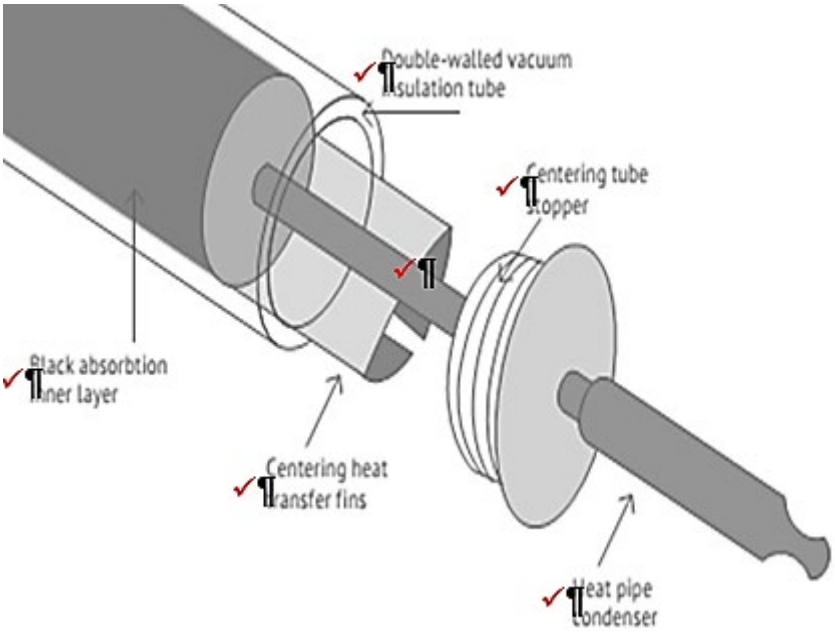

(6)

4.3
- Spirit level:✓ Provides a more accurate measurement when checking horizontal and vertical planes for accuracy or plumbness✓
- Folding ruler:✓ Used for measurements, comes in 2 m lengths and is marked with centimetre and millimetre units✓
- Set of screw drivers:✓ Hand-operated, used for turning screws with different types of heads✓
- Cold chisel:✓ Struck with a mallet, the blade on its end can carve or cut hard material such as wood, stone or metal✓
- Claw hammer:✓ Used to drive in nails, fit parts or break parts apart✓
- Water pump pliers:✓ Allows for a wider range of sizes to be gripped✓
- Shifting spanner:✓ Adjustable spanner with a movable jaw used to fasten hexagonal fittings and fixtures✓
- Installation wrench:✓ 17/14 wrench/spanner with fittings/attachment for stud screws (M10 or M12)✓ (Any relevant 3 × 2) (6)

4.4
- Make sure that the tube ends are cut square and the burrs are removed.
- Slip the nut and compression ring over the pipe and insert the pipe into the fitting until it rests against the fitting's inner shoulder.
- Slide the compression ring into position and tighten the nut.
- Tightening the nut causes the ring to be compressed between mating surfaces, providing a leak-proof connection.
- When the connection is disassembled, the ring will remain attached to the pipe and shall not be removed. (Any 4 × 1) (4)

4.5
- The cold water is turned on so that the storage tank fills.
- The hot-water taps of the house are turned on until water free of air bubbles is delivered.
- The whole system is checked for leaks.
- The storage tank and collector are checked to make sure that they are properly secured in place.
- There should be sufficient solar radiation – the pipe leading from the collectors to the storage tank could be checked by hand to indicate system functioning. (5)

4.6 Active systems rely on pumps, valves and controllers to circulate the water or heat transfer fluids through the collectors. Passive systems rely on gravity and natural tendency for water to rise as it is heated to circulate water through the collectors. (2 + 2) (4)

[35]

TOTAL: 100

Copyright reserved