higher education & training

Department:
Higher Education and Training
REPUBLIC OF SOUTH AFRICA

NATIONAL CERTIFICATE (VOCATIONAL)

REFRIGERATION PRACTICE
NQF LEVEL 3

(6030053)

16 November 2022 (X-paper)
09:00–12:00

This question paper consists of 6 pages.

405Q1N2216

Copyright reserved

TIME: 3 HOURS
MARKS: 100

INSTRUCTIONS AND INFORMATION

1. Answer all the questions.
2. Read all the questions carefully.
3. Number the answers according to the numbering system used in this question paper.
4. Start each section on a new page.
5. Use only a blue or black pen.
6. Write neatly and legibly.

Copyright reserved

QUESTION 1

1.1 Define *power.* (2)

1.2 Calculate the power required to move a mass of 260 kg over a distance of 5 m in 2 minutes if the gravitational acceleration is 5 m/s^2. (5)

1.3 What is an absolute zero temperature in °C? (1)

1.4 Define *latent heat*. (2)

1.5 Calculate the heat required to condense 4 kg of refrigerant vapour (R22) from a temperature of 390 K, if the specific heat of R22 vapour is 1,03 kJ/kg and the latent heat of condensation is 156 kJ/kg. (5)

1.6 Define *pressure*. (2)

1.7 The absolute pressure inside a vessel is 350 kPa.

Calculate the gauge pressure if the vessel is at sea level. (2)

1.9 A cooling coil cools 20 m^3/s of air from 32 °C to 22 °C. What is the capacity of the coil if the density of air is 3,6 kg/m^3? (3)

[25]

QUESTION 2

2.1 What is meant by the term *fusible plug*? (2)

2.2 As a refrigeration technician, you become aware that the compressor of a refrigeration plant never stops (in other words, it runs continuously).

Name THREE possible causes for it. (3)

2.3 State the THREE corrective actions to solve the problem mentioned in QUESTION 2.2. (3)

2.4 Give ONE term for each of the following descriptions. Write only the term next to the question number (2.4.1–2.4.4) in the ANSWER BOOK.

2.4.1 A pressure relief device that ruptures at a predetermined pressure.

2.4.2 A valve that relieves pressure as part of a safety design.

2.4.3 A pressure-responsive mechanism that is designed to automatically stop the compressor before the design pressure is reached.

2.4.4 The unit in which the components of a refrigeration system are packaged in a factory.

(4 × 1) (4)

2.5 State the THREE qualities of oil that are essential in a refrigeration system. (3)

[15]

Copyright reserved

QUESTION 3

3.1 Name TWO effects of non-water treatment in an air-conditioning plant. (2)

3.2 What is corrosion in metals? (2)

3.3 Name the THREE factors that accelerate corrosion. (3)
[7]

QUESTION 4

4.1 Identify the following symbols by writing the correct answer next to the question number (4.1.1–4.1.5) in the ANSWER BOOK.

4.1.1 

4.1.2 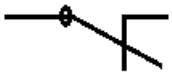

4.1.3 

4.1.4 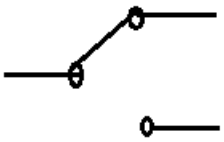

4.1.5 

(5 × 1) (5)

4.2 Name the THREE main components of a refrigeration system unit. (3)

4.3 FIGURE 1 below shows a diagram of the parts of a refrigerator-freezer combination.

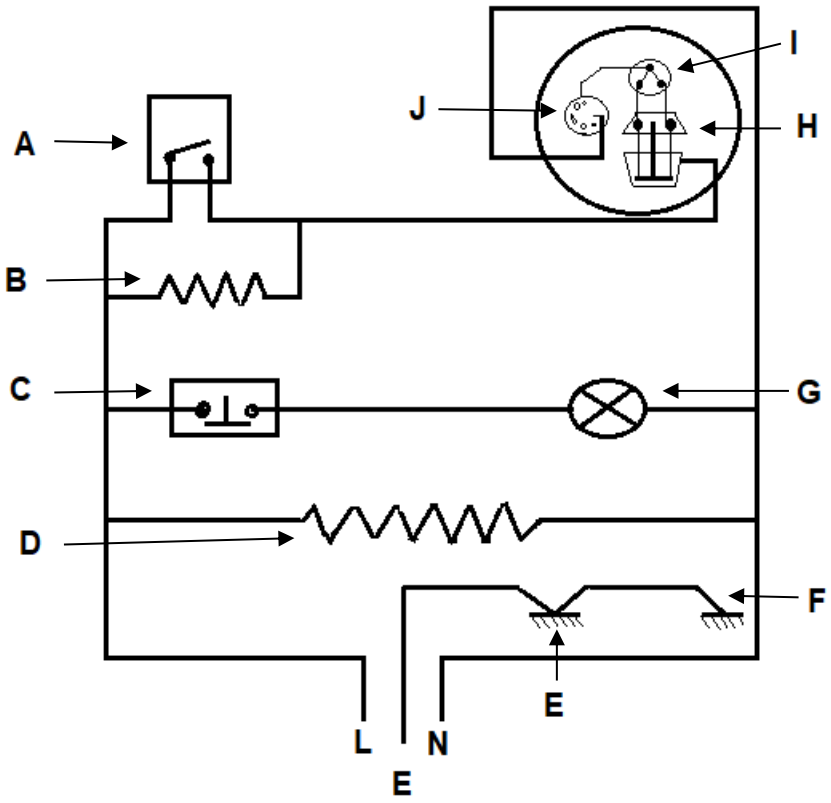

FIGURE 1

4.3.1 Label the parts (A–J) of the diagram in FIGURE 1. (10)

4.3.2 What is the purpose of component 'G' in the system? (2)

4.3.3 Is component 'F' a resistive or an inductive load? (1)

4.4 Explain the operation of low-pressure and high-pressure safety switches. (4)

[25]

QUESTION 5

5.1 What is the function of a thermostatic expansion valve? (2)

5.2 Define *changeover*. (2)

5.3 State the THREE mechanical faults that can occur when a plant is not well maintained. (3)

5.4 Name TWO subsystems and briefly explain each subsystem in an electrical system. (4)

5.5 Rearrange the letters (A–K) in the correct sequence to describe the procedure for installing a replacement compressor motor in a refrigeration system. Write the statements in the correct sequence in the ANSWER BOOK.

A Connect the vacuum pump to the system through the gauge manifold.

B Reconnect the electrical circuit.

C Charge the system with the correct amount of refrigerant.

D Charge a small amount of R11 into the system and then purge the system.

E Charge the lines with a small amount of refrigerant used in the system.

F Carefully clean the ends of the suction line, the discharge line, and the oil line.

G Install the piercing valve, valve adaptor, and the gauge manifold.

H Connect the lines.

I Cut the liquid line between the condenser and the refrigeration control.

J Put some vapour refrigerant into the system and check for leaks.

K Carefully clean the suction line, the discharge line and the oil line connections on the motor compressor.

(11 × 1) (11)
[22]

QUESTION 6

6.1 When water in an air-conditioning system is not treated, water-related problems can occur in the system.

Identify THREE water-related problems. (3)

6.2 Metals are destroyed by either chemical or electrochemical means.

What is this process called? (2)

6.3 Name the type of air-conditioning system that requires water treatment. (1)
[6]

TOTAL: 100

Copyright reserved