higher education & training

Department:
Higher Education and Training
REPUBLIC OF SOUTH AFRICA

NATIONAL CERTIFICATE (VOCATIONAL)

PLUMBING
NQF LEVEL 3

(12030373)

27 November 2023
09:00–12:00

This question paper consists of 5 pages and 1 diagram sheet.

385Q1N2327

Copyright reserved

DEPARTMENT OF HIGHER EDUCATION AND TRAINING
REPUBLIC OF SOUTH AFRICA

NATIONAL CERTIFICATE (VOCATIONAL)
PLUMBING
NQF LEVEL 3
TIME: 3 HOURS
MARKS: 100

INSTRUCTIONS AND INFORMATION

1. Answer all the questions.
2. Read all the questions carefully.
3. Number the answers according to the numbering system used in this question paper.
4. Use only a black or blue pen.
5. Write neatly and legibly.

Copyright reserved

QUESTION 1: COLD WATER SUPPLY

1.1 Indicate whether the following statements are TRUE or FALSE by writing only 'True' or 'False' next to the question number (1.1.1–1.1.10) in the ANSWER BOOK.

1.1.1 If you calculate pipe sizes for the installation of a cold water system, you determine the velocity of water that flows through it.

1.1.2 Water reticulation describes the pipe layout of sewage flow to the purification dam.

1.2.3 It is a responsibility of a construction plumber to make sure that the installation meets all the national specifications (SANS).

1.1.4 Capillary type joints are soldered joints using solder and flux.

1.1.5 The backflow (reverse flow) of the water supply can be caused by water mains bursts and the water in the pipeline draining off.

1.1.6 An indirect cold water cistern is a large storage tank installed inside the room of a house.

1.1.7 Any water reticulation to a residential area must have water meters installed by a local authority.

1.1.8 The main function of the ball valve (float valve) is to control the incoming of water in the storage tank or cistern.

1.1.9 When laying galvanised mild steel pipe underground, special precautions such as lagging or coating the pipe work should be taken to protect the pipe from corrosion.

1.1.10 It is commonly known that all plastic pipes for a water supply should not be protected from direct sunlight.

(10 × 1) (10)

1.2 Define the term *water meter.* (2)

1.3 What material can be used to make watertight joints in the copper and GMS connections? (4)

1.4 Differentiate between *capillary* and *compression joints* as they are usually used on cold water connections. (2 × 2) (4)

[20]

QUESTION 2: HOT WATER SUPPLY

2.1 What is the best type of joint to use for connecting valves and terminal fittings to the following?

2.1.1 Copper pipes in a hot water supply system

2.1.2 GMS pipes in a hot water supply system

(2 × 1) (2)

2.2 Make a neat, fully labelled diagrammatic sketch of an electrical hot water heating installation with a vertical geyser with a pressure rating of 400 kPa.

Clearly indicate all the required pipes and valves, including the anti-syphon loop.

NOTE: ignore the safety drip tray. (8)

2.3 Describe the working principles of a typical pressure control valve. (6)

2.4 Briefly explain why thermal insulation is used on hot water pipework. (4)

[20]

QUESTION 3: ABOVE GROUND DRAINAGE SYSTEM

3.1 Why are sanitary components always installed with water seal traps? (1)

3.2 Mention THREE types of water seal traps commonly used in plumbing. (6)

3.3 Differentiate between soil water and wastewater pipes, citing their functions in the plumbing industry. (4)

3.4 What are TWO disadvantages and TWO advantages of the TWO pipe system regarding the installation? (4)

[15]

QUESTION 4: SANITARY INSTALLATION

4.1 What are splashbacks used for and what materials can they be made of? (4)

4.2 Make a drawing of a vertical section through a wash-down water closet (P-trap). (6)

4.3 What kind of water seal trap is fitted into a bath and how should it be connected? (3)

4.4 In which way is the water supply usually connected to a wall-mounted, single-bowl urinal? (2)

[15]

Copyright reserved

QUESTION 5: INSTALLING AND MAINTAINING RAINWATER SYSTEM

5.1 List THREE materials that are used to manufacture the gutter and rainwater pipes. (3 × 2) (6)

5.2 List any TWO characteristics of a gutter uPVC. (2)

5.3 In a sequential order, list the steps to follow when aligning and securing the aluminium gutter brackets against the fascia board when installing fibre cement gutters. (5)

5.4 Why GMS pipes are not recommended in coastal regions. (2)

[15]

QUESTION 6: VENT PIPE FLASHING

In FIGURE 1 on the DIAGRAM SHEET (attached), TWO views of a square pipe are shown.

Use the parallel-line method to develop the full pattern on scale 1:5 of the truncated pipes.

Do NOT make any allowances for the seam. **[10]**

QUESTION 7: TRENCHING, EXCAVATION AND TRENCH SUPPORT

7.1 Give THREE factors to be considered when planning and performing the underground pipe work where trenching, excavations, trench support and backfilling of trenches are required. (3)

7.2 What is the purpose of trench support for underground drainage systems? (2)

[5]

TOTAL: 100

Copyright reserved

(12030373)

DIAGRAM SHEET 1

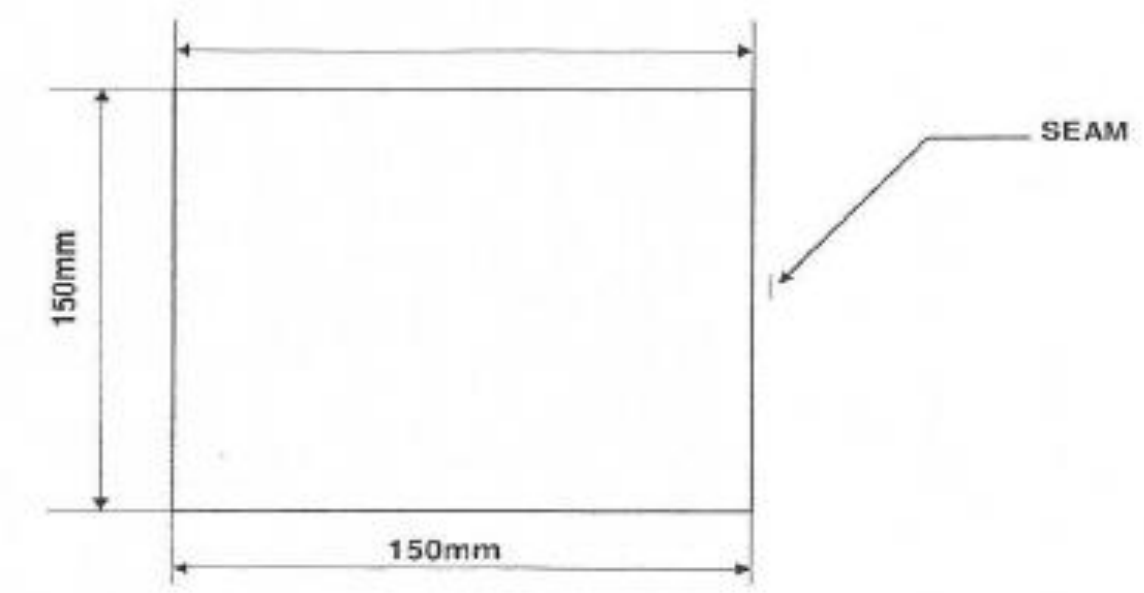

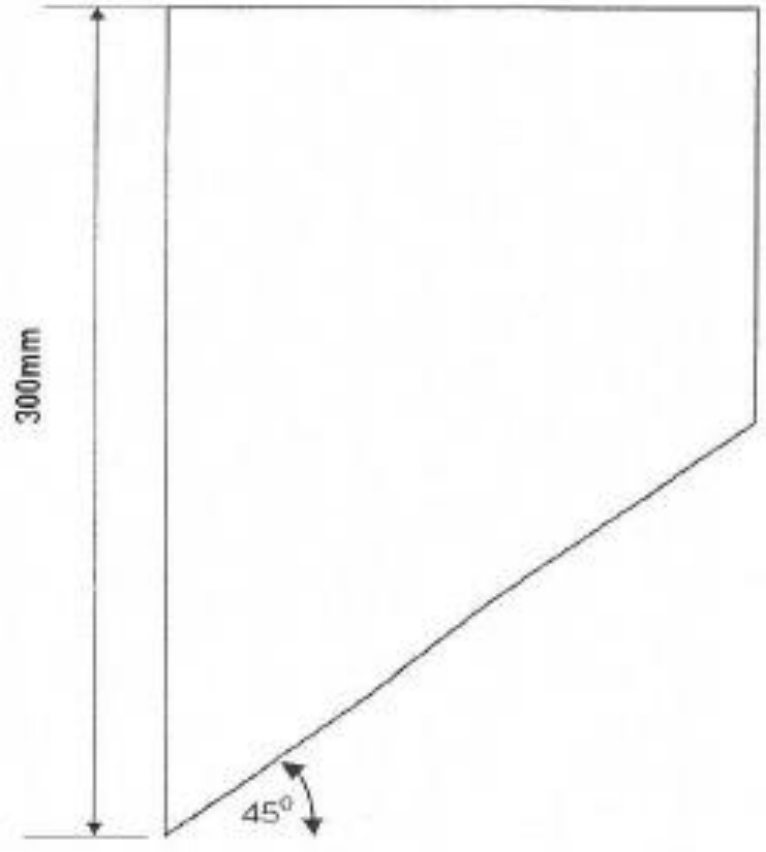

Copyright reserved