higher education & training

Department:
Higher Education and Training
REPUBLIC OF SOUTH AFRICA

NATIONAL CERTIFICATE (VOCATIONAL)

MECHATRONIC SYSTEMS
NQF LEVEL 3

(6040213)

27 November 2023 (X-paper)
09:00–12:00

This question paper consists of 7 pages.

381Q1N2327

Copyright reserved

DEPARTMENT OF HIGHER EDUCATION AND TRAINING
REPUBLIC OF SOUTH AFRICA

NATIONAL CERTIFICATE (VOCATIONAL)
MECHATRONIC SYSTEMS
NQF LEVEL 3
TIME: 3 HOURS
MARKS: 100

INSTRUCTIONS AND INFORMATION

1. Answer all the questions.
2. Read all the questions carefully.
3. Number the answers according to the numbering system used in this question paper.
4. Use only a black or blue pen.
5. Write neatly and legibly.

Copyright reserved

QUESTION 1

1.1 A thermocouple probe is the first choice for many applications.

1.1.1 List FOUR limitations of thermocouples. (4 × 1) (4)

1.1.2 Give TWO applications in which thermocouples are used. (2)

1.2 The operational amplifier is used in signal conditioning processes to eliminate any changes that may occur due to an undesired event or a programmed change on the related motion-control application.

Determine the best form of multivibrator control when applied to a conveyor belt starting and stopping control application system. (2)

1.3 The thyristor provides a convenient method of converting AC voltage to a variable DC voltage for controlling the speed of a DC motor.

1.3.1 Briefly explain the operation of the circuit that uses a thyristor to control the speed of a DC motor. (3)

1.3.2 Draw an electronic control circuit that uses SIX thyristors to control the speed of a DC motor. (7)

1.4 Explain how a diode is used to protect a transistor. (2)

[20]

QUESTION 2

2.1 Differentiate between *hydraulic* and *pneumatic actuators*. (2 × 2) (4)

2.2 Electromagnets consist of a core of magnetic material surrounded by a coil through which electric current is passed to magnetise the core.

2.2.1 Give FIVE examples where electromagnets are used. (5 × 1) (5)

2.2.2 Name TWO advantages of electromagnets over permanent magnets. (2 × 1) (2)

Copyright reserved

2.3 FIGURE 1 below shows a diagram for a two-relay reversal circuit.

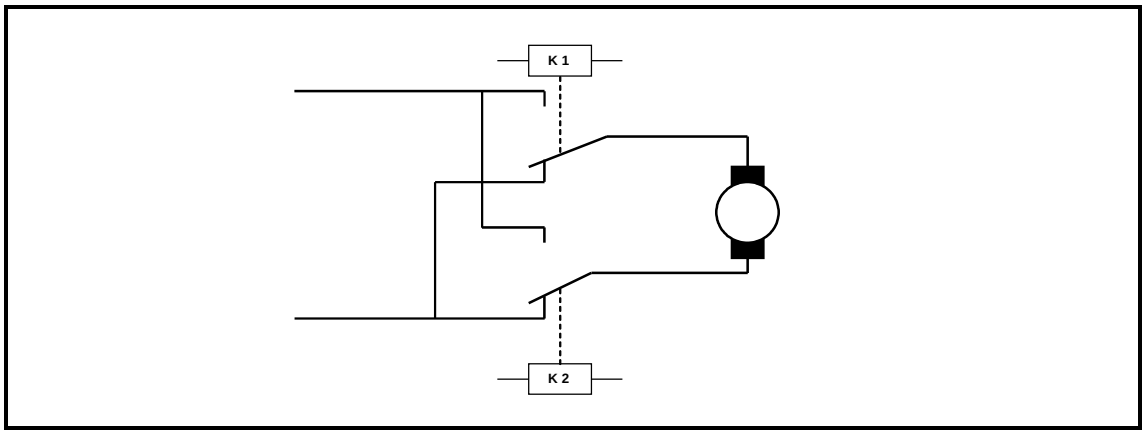

FIGURE 1

Explain how you would control the direction of a motor using a relay. (5)

2.4 A stepper motor is a brushless DC electric motor that divides a full rotation into several equal steps.

Briefly explain the operation of the stepper motor. (4)
[20]

QUESTION 3

3.1 Explain what is meant by the term *hydrodynamics*. (2)

3.2 Briefly explain why a non-positive displacement pump is not used in hydraulic applications. (2)

3.3 A manifold or a distributor is another important element found in hydraulic systems.

Name TWO types of manifolds. (2 × 1) (2)

3.4 List FOUR documents that you would use when designing hydraulic applications. (4 × 1) (4)

3.5 FIGURE 2 below shows a dump truck with a dumping bed coupled to a hydraulic double-acting cylinder.

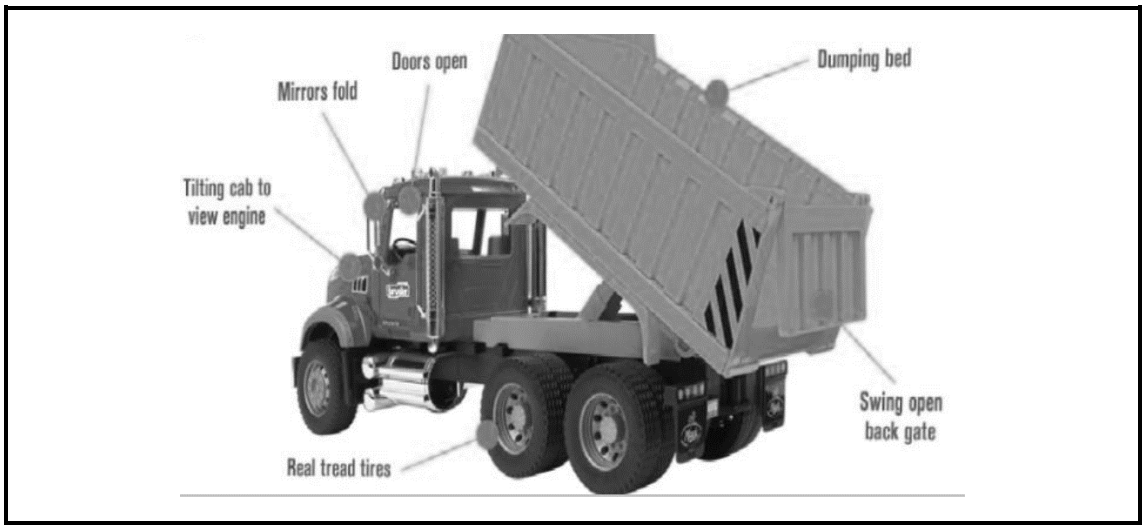

FIGURE 2

Design the hydraulic circuit for the dumping system using the following components:

- Double-acting cylinder
- 4/3-way valve
- Pressure gauge
- Pressure relief valve
- One-way flow control valve (to reduce speed in both direction)
- Shut-off valve (10)

[20]

QUESTION 4

4.1 Explain the term *proportional control*. (4)

4.2 Electro-hydraulic systems use oil under pressure from a hydraulic power pack as hydraulic energy in mechatronics applications. That hydraulic energy is then converted to kinetic energy by means of hydraulic cylinders or hydraulic motors to give an output force.

Differentiate between *pressure* and *force*. (2 × 2) (4)

4.3 FIGURE 3 below represents an electro-hydraulic oscillating system.

Design the electrical circuit diagram for this system and clearly show all safety switches, voltage supply and start/stop buttons.

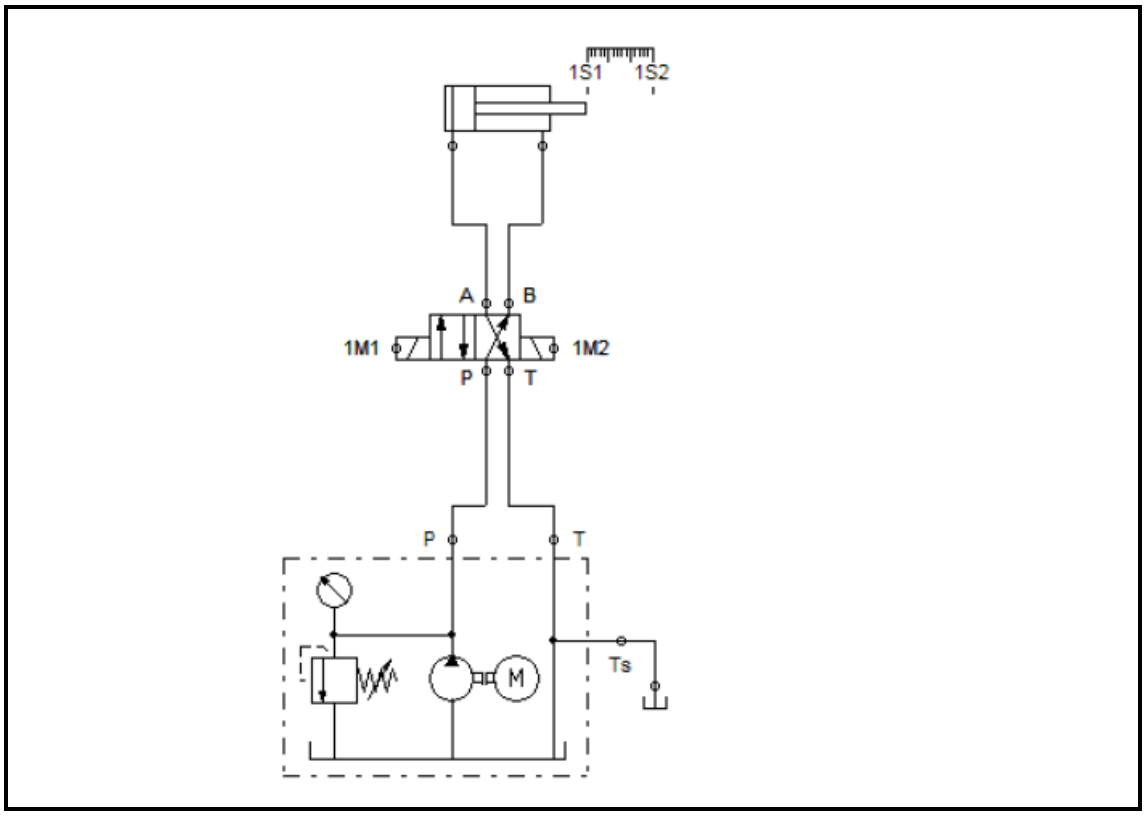

FIGURE 3

(12)
[20]

QUESTION 5

5.1 Electro-hydraulic machine malfunctions may be caused by underlying issues related to FLOW, PRESSURE or DIRECTION.

What underlying issue can cause each of the following malfunctions?

5.1.1 Slow actuator speed

5.1.2 Wrongly adjusted relief valve

(2 × 1) (2)

5.2 Explain the difference between *cause* and *consequence* related to an electro-hydraulic system malfunction. (2 × 2) (4)

5.3 Hydraulic systems depend on correct flow and pressure of the hydraulic fluid from the power pack pump. The measurement of flow and pressure are the two important means of troubleshooting a hydraulic system, temperature being the third quantity.

Answer the following questions.

5.3.1 List THREE faults that may cause the hydraulic fluid to overheat continually. (3)

5.3.2 State THREE causes of excessive noise in the hydraulic pump. (3)

5.4 Explain what must be checked before assembling an accumulator. (4)

5.5 An ammeter is an instrument that is used to measure current in mechatronics applications.

Draw a simple circuit diagram to show how an ammeter is connected in a simple circuit. (4)

[20]

TOTAL: 100

Copyright reserved