higher education & training

Department:
Higher Education and Training
REPUBLIC OF SOUTH AFRICA

MARKING GUIDELINE

NATIONAL CERTIFICATE (VOCATIONAL)

MECHATRONIC SYSTEMS
NQF LEVEL 3

27 NOVEMBER 2023

This marking guideline consists of 7 pages.

Copyright reserved

QUESTION 1

1.1 1.1.1

- Not accurate as RTDs in a certain set temperature range.
- Susceptible to drift over time.
- Vulnerable to corrosion when badly insulated.
- Signals are not perfectly linear.
- Recalibration is difficult.
- They are nonlinear.
- They have a low output voltage.
- Less sensitive.
- They require a reference for operation. The stray voltage pick-up is possible. (Any 4 × 1) (4)

1.1.2 Thermocouples are used in applications such as home appliances, industrial processes, electric power generation, furnace monitoring and control, food and beverage processing, automotive sensors, aircraft engines, rockets, satellites and spacecraft. (Any 2 × 1) (2)

1.2 Bistable✓✓ as one can start and stop the conveyer belt system using the set and reset function. (2)

1.3 1.3.1 When an AC signal is applied at the input and when the gate of the SCR is triggered,✓ the AC signal is rectified, and the DC motor can run.✓ By changing the value of the potentiometer we can adjust the time it takes to trigger the SCR and therefore change the speed of the motor.✓ (3)

1.3.2

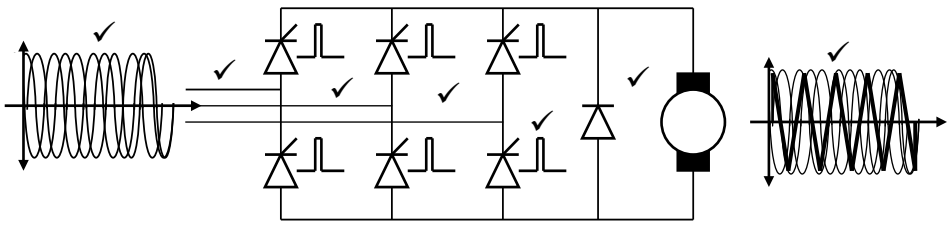

(7)

1.4 By providing a path for back-voltage (back EMF) generated in the coil of the relay coil to be diverted away from the transistor to prevent any damage.✓✓

OR

The diode is in place to protect the transistor from reverse VBE breakdown. If you reverse-bias the base-emitter junction by taking the transistor's emitter to ~6V more positive than the base, it will break down and begin conducting. This reverse breakdown damages the base-emitter junction, causing a degradation in hFE. (Any 1 × 2) (2)

[20]

QUESTION 2

2.1
- Hydraulic actuators are suitable for high-force applications, whereas pneumatic actuators can be used for low-force and extreme temperature applications.✓✓
- Pneumatic actuators provide high-speed motion compared with hydraulic actuators.✓✓
- Hydraulic actuators are far more efficient but can be dirty, whereas pneumatic actuators are less efficient but much cleaner.
- Horsepower-to-weight ratio is greater for hydraulic actuators than that of pneumatic actuators.
- Pneumatic actuators are cost-effective and require minimum maintenance, whereas hydraulic actuators are much more expensive and require much more maintenance.
- Hydraulic actuators provide precise linear motion compared with pneumatic actuators. (Any 2 × 2) (4)

2.2 2.2.1
- Generators
- Motors
- Transformers
- Electric buzzers
- Bells
- Headphones
- Loudspeakers
- Relays
- Valves
- Recorders
- Hard disks
- Induction cookers
- Magnetic locks (Any 5 × 1) (5)

2.2.2
- They can be turned 'on' and 'off'.
- The strength of the magnetic field can be varied.
- The polarity of the electromagnet can be reversed.
- It is easier to manufacture electromagnets.
- Electromagnets have more magnetic power than permanent magnets. (Any 2 × 1) (2)

2.3 When K1 is energised,✓ the supply voltage will be connected to the motor that will rotate in a clockwise direction.✓ When K2 is energized,✓ the polarity on the electric motor will be reversed✓ and the motor will run anti-clockwise.✓ (5 × 1) (5)

2.4 By energizing one or more of the stator phases,✓ a magnetic field is generated by the current flowing in the coil, and the rotor aligns with this field.✓ By supplying different phases in sequence,✓ the rotor can be rotated by a specific amount to reach the desired final position.✓ (4)

[20]

Copyright reserved

QUESTION 3

3.1 Hydrodynamics have to do with liquids in motion,✓ especially when the liquid impacts on an object and releases part of its energy to do work.✓ (2)

3.2 Non-positive displacement pumps can move lots of fluid rapidly✓ but do not seal and do not push fluid well at higher pressures and lower flow rates.✓ (2)

3.3
- Supply manifold
- Return manifold (2)

3.4
- A positional sketch (perception drawing)
- Circuit diagram with working components
- Circuit diagram with pressure requirements
- Component materials list
- Displacement step diagram
- Displacement time diagram
- Function diagram
- Sequence function chart (Any 4 × 1) (4)

3.5

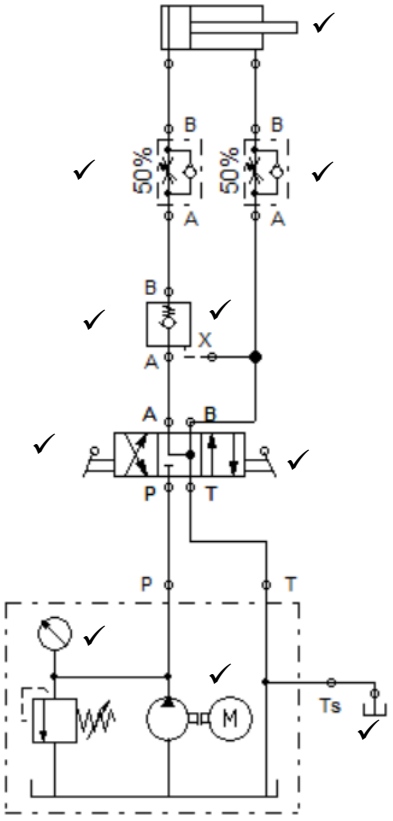

NOTE: No marks to be awarded if the components are connected incorrectly or at incorrect positions. Marks are only awarded for connecting components correctly. (10)

QUESTION 4

4.1 Proportional control is a type of linear feedback control system ✓ in which a correction is applied to the controlled variable✓ and the size of the correction is proportional to the difference between the desired value (set point, SP)✓ and the measured value (process variable, PV).✓ (4)

4.2 A force can be a push or a pull.✓ When a force is exerted on an object it can change the object's speed, direction of movement or shape.✓

Whereas

Pressure is a measure of how much force✓ is acting upon an area.✓

(2 × 2) (4)

4.3

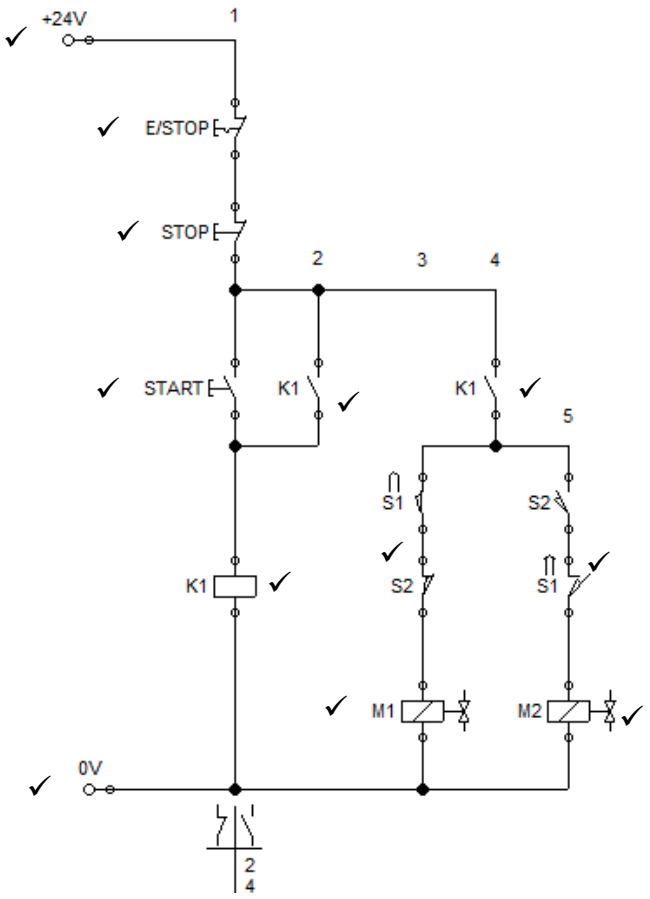

(12)
[20]

QUESTION 5

5.1 5.1.1 Flow
5.1.2 Flow and Pressure
(2 × 1) (2)

5.2 Cause refers to the origin of the fault (loose wire, leaking pipe).✓✓

Whereas

Consequence is the result of the fault (machine malfunction, erratic movement).✓✓ (2 × 2) (4)

5.3 5.3.1
- Oil reservoir too small
- Oil level too low
- Incorrect fluid – wrong viscosity, change in season
- Dirty hydraulic fluid
- Heat exchanger faulty
- Heat exchanger turned off
- Hydraulic line sizes too small
- Relief valve operating continuously
- System overload
- Excessive pump speed (Any 3 × 1) (3)

5.3.2
- Cavitations caused by air entering pump inlet
- Dirty inlet suction strainer
- Loose connection on suction line or suction strainer
- Low hydraulic fluid level
- Excessive pump speed
- Incorrect hydraulic fluid
- Oil is foaming – low or old oil
- Very large volume actuator causing periodic low levels in tank
- Clogged reservoir air breather vent causing vacuum in tank
- Excessive oil viscosity causing cavitations
- Temperature is too low for oil
- Damaged or worn pump
- Misalignment of pump and motor
- Pump and/or motor mounts worn or loose
- Relief valve chattering – check setting
- Relief valve operating continuously (Any 3 × 1) (3)

5.4
- Check that the bladder is not damaged, worn or perished.
- Check that the poppet valve slides freely and that the spring is undamaged.
- Check that the gaskets and seals are not worn.
- Check that the interior of the accumulator body has no cracks or signs of failure. (4)

5.5

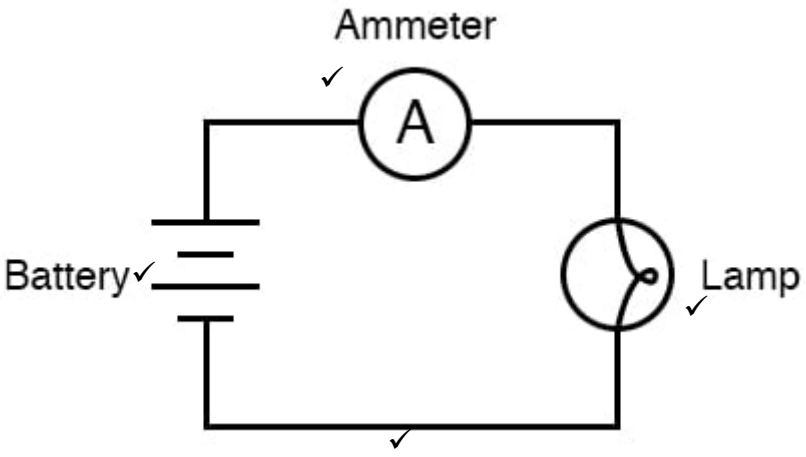

(4)
[20]

TOTAL: 100

Copyright reserved