higher education & training

Department:
Higher Education and Training
REPUBLIC OF SOUTH AFRICA

MARKING GUIDELINE

NATIONAL CERTIFICATE (VOCATIONAL)

ELECTRICAL SYSTEMS AND CONSTRUCTION
NQF LEVEL 3

27 November 2023

This marking guideline consists of 7 pages.

Copyright reserved

QUESTION 1

1.1 It is a closed enclosure that comprises a base with a removable cover✓ that is intended to completely surround insulated conductors and cables in electrical installations✓ and accommodate other electrical equipment, for example in the case of power skirting.✓ (3)

1.2
- The supply voltage does not exceed 50 V.
- The supply uses an underground service connection.
- The roof is made of, or covered with, non-conductive material.
- The gutter(s), downpipe(s) and waste pipe(s) are of non-conductive material.
- The gutter(s) and downpipe(s) are attached to a metal roof that is covered with non-conductive material. (Any 4 × 1) (4)

1.3 1.3.1 Saddles are used to position and secure conduit to walls and other structures. (1)

1.3.2
- Couplings are used to extend the length of conduit.
- Couplings are used to connect to an internal thread fitting.

(Any ONE) (1)

1.3.3 Junction boxes are used as a connection point for wires. (1)

1.4 Supply conductors = 16 mm^2✓
K-value for supply conductors = C × number of conductors
= 42 × 3
= 126✓

Using Table 6.24 of SANS 10142-1: K = 126 is > 90 < 144, which corresponds with a 25-mm conduit.✓ (3)

1.5
- Numbered parts are materials that can be counted, for example circuit-breakers, socket outlets and switches.
- Measured parts are materials that need to be charged per length required, for example cables and conduit. (2)

1.6
- Can corrode (rust)
- Time consuming to install, for example threading and bending
- More expensive than PVC conduit (Any 2 × 1) (2)

1.7 1.7.1 A – Main earth terminal or consumer's earth terminal
B – Thermostat
C – Neutral busbar
D – Circuit-breaker
E – Double-pole isolator
F – Element (6)

Copyright reserved

1.7.2 A ripple relay is a device installed by municipalities✓ to switch geysers on and off at set times to limit electricity usage.✓ (2)

[25]

QUESTION 2

2.1
2.1.1 False
2.1.2 True
2.1.3 False
2.1.4 True
2.1.5 True
2.1.6 True
2.1.7 False
2.1.8 False
2.1.9 True
2.1.10 True

(10 × 1) (10)

2.2 2.2.1
- 30-mA sensitivity
- 60-A or 63-A overload rating (2)

2.2.2 Earth leakage protection shall disconnect both the phase and the neutral conductors in a single-phase system. (1)

2.3

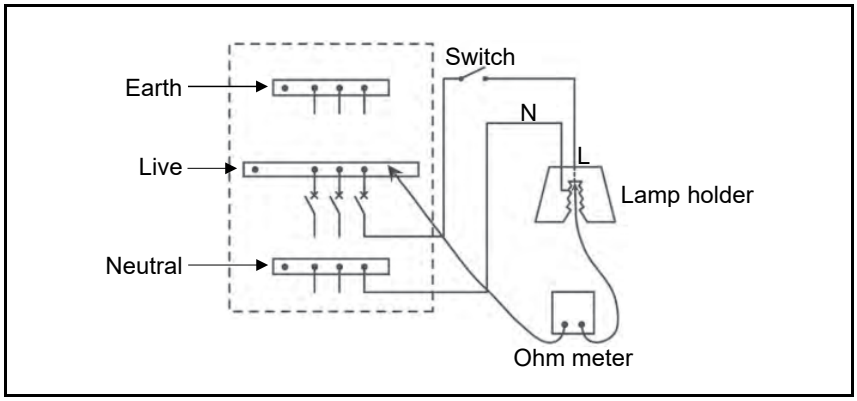

FIGURE 1

Circuit diagram = 3 marks
Any 4 labels × ½ = 2 marks (5)

2.4 2.4.1
- Single-phase tester
- Installation electrician
- Master installation electrician

(Any 1 × 1) (1)

2.4.2 Master installation electrician (1)

2.5
- Accessible components are correctly selected.
- All protective devices are of the correct current rating and can withstand the prospective fault level.
- All conductors are of the correct current-carrying capacity.
- Components have been correctly installed.
- Disconnecting devices are correctly located and all switchgear switches phase conductors only.
- Different circuits are electrically separated.
- The connection of conductors, earthing and bonding is mechanically strong and electrically continuous.
- Circuits, fuses, switches, terminals, earth leakages, circuit-breakers and distribution boards are correctly and permanently marked.
- Safety lighting and emergency lighting and signs are functioning correctly.
- In the case of a new installation or alterations to an existing installation, the new, added or altered part complies with SANS 10142-1.
- In the case of an existing installation, the installation complies with the general safety principles of SANS 10142-1.
- Where an alternative supply is installed, it complies with the requirements of section 7.12 of SANS 10142-1.
- The position of the readily accessible earth terminal for the earth connection or other services made by installers of such services is indicated on all distribution boards. (Any 5 × 1) (5)

[25]

QUESTION 3

3.1
3.1.1 Acceptable
3.1.2 Acceptable
3.1.3 Unacceptable
3.1.4 Unacceptable
3.1.5 Unacceptable
3.1.6 Acceptable

(6 × 1) (6)

3.2 Maintenance procedures relate to the repair, calibration, replacement and refurbishing✓ of electrical equipment and systems.✓ (2)

3.3
Step 1: Identify the hazards.
Step 2: Decide who might be harmed and how.
Step 3: Perform risk assessment.
Step 4: Perform risk control.
Step 5: Monitor and review. (5)

Copyright reserved

3.4
- Smell
- Timing of occurrences
- Loss of functionality
- Intermittency
- Sound
- Heat
- Open circuit
- Short circuit
- Insulation breakdown (Any 2 × 1) (2)

[15]

QUESTION 4

4.1
- Radial distribution system
- Ring distribution system (2)

4.2 4.2.1 The neutral and protective functions on the incoming supply are combined in a single conductor✓ and in the consumer's electrical installation are serviced by separate conductors.✓ (2)

4.2.2 TN-C (1)

4.3 A work permit is a statement that confirms that a circuit or piece of equipment is safe to work on. (1)

4.4
- To provide a return conductive path for any earth fault current and earth leakage current
- To maintain the neutral of the low-voltage system as close as possible to the earth potential
- To ensure that the medium-voltage protection operates in the event of a fault between the medium-voltage and low-voltage windings of a transformer
- To reduce the prospective touch voltage as much as is reasonably practical (4)

[10]

Copyright reserved

QUESTION 5

5.1

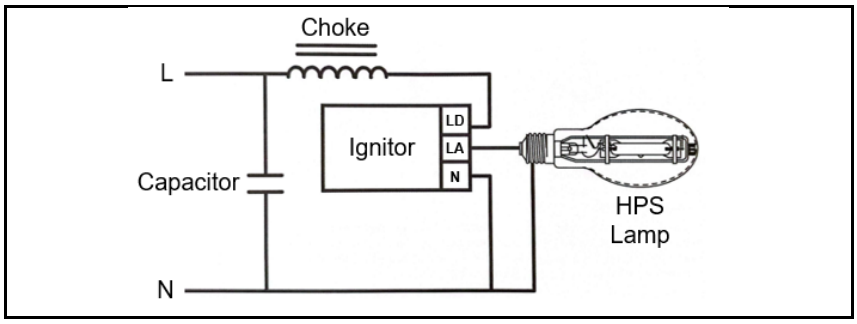

FIGURE 2

Commented [L1]: Change in figure:
HPS lamp

Circuit diagram = 3 marks
Any 4 labels ×½ = 2 marks (5)

5.2 5.2.1
- To support the lamp in the fixture
- To provide a means of making electric contact (Any ONE)

5.2.2
- It initially completes the circuit for preheating the electrodes.
- It opens the circuit to provide a voltage kick for ignition.

(Any ONE)

5.2.3 To correct the power factor

(3 × 1) (3)

5.3 $P = VI\ \cos\theta$

$I = \frac{P}{V\cos\theta}$ ✓

$I = \frac{15\ 000}{220\ \times\ 0{,}89}$ ✓

$= 76{,}609\ A$ ✓ (3)

5.4 5.4.1 The current and voltage are in phase, resulting in a power factor of 1. (1)

Copyright reserved

5.4.2
- A low power factor increases losses in power distribution systems and results in increased energy costs.
- Larger cables and switchgear are necessary to supply a given load.
- Larger currents give rise to greater copper losses in transmission lines and transformers.
- Larger currents give rise to greater voltage drops in cables.
- Larger cables may be required on the consumer's side of the electrical installation to carry the larger currents demanded by a load operating at a low power factor.
- Larger cables are more costly when one considers the extra diameter of copper required.
- The net result is that the consumer will pay more for electricity.

(Any 2 × 1) (2)

5.5
- Replacing incandescent lamps with energy-efficient compact fluorescent lamps
- Using energy-efficient cooking utensils such as pressurised steam pots rather than open sauce pans that waste a lot of heat
- Installing solar water heaters to reduce the reliance on energy-guzzling geysers

(Any ONE) (1)
[15]

QUESTION 6

6.1 A – EVA sheet
B – Glass
C – Cells grouped together
D – Composite plastic sheet (4)

6.2
- It uses sunlight for the conversion process, so the input energy is free.
- It requires very little maintenance.
- It has no moving parts, so there is no wear.
- It is highly reliable; some solar modules are guaranteed for more than 20 years.
- It has a modular design, so it is easily manageable and upgradeable.
- It can be easily installed at an existing premises.

(Any 2 × 1) (2)

6.3
- Conduction
- Convection
- Radiation
- Reflection

(4)
[10]

TOTAL: 100

Copyright reserved