higher education & training

Department:
Higher Education and Training
REPUBLIC OF SOUTH AFRICA

NATIONAL CERTIFICATE (VOCATIONAL)

ELECTRICAL SYSTEMS AND CONSTRUCTION
NQF LEVEL 3

(12041033)

27 November 2023 (X-paper)
09:00–12:00

This question paper consists of 8 pages.

369Q1N2327

Copyright reserved

DEPARTMENT OF HIGHER EDUCATION AND TRAINING
REPUBLIC OF SOUTH AFRICA

NATIONAL CERTIFICATE (VOCATIONAL)
ELECTRICAL SYSTEMS AND CONSTRUCTION
NQF LEVEL 3
TIME: 3 HOURS
MARKS: 100

INSTRUCTIONS AND INFORMATION

1. Answer all the questions.
2. Read all the questions carefully.
3. Number the answers according to the numbering system used in this question paper.
4. Use only a black or blue pen.
5. Write neatly and legibly.

Copyright reserved

QUESTION 1

1.1 Define the term *trunking* as stipulated in the Code of Practice for the Wiring of Premises, SANS 10142-1. (3)

1.2 If a building is connected to an electricity supply, the roof(s), gutter(s), downpipe(s) and waste pipe(s) shall be bonded and earthed and the resistance of the earth continuity path shall not exceed 0,2 Ω.

State FOUR cases where the roofs, gutters, downpipes and waste pipes need not be bonded and earthed. (4)

1.3 Various fittings and accessories are used when installing conduit in an electrical installation.

Give ONE use for each of the following conduit fittings:

1.3.1 Saddles

1.3.2 Couplings

1.3.3 Junction boxes

(3 × 1) (3)

1.4 Annexure F of SANS 10142-1:2017 can be used to determine the conduit size required to accommodate single-core conductors of different sizes.

Nominal cross-sectional area of conductors in mm²	Value of C
1	8
1,5	10
2,5	14
4	17
6	22
10	30
16	42
25	65
35	84
50	118
70	152

Table 6.23 of SANS 10142-1

Value of K	Conduit diameter in mm
90	20
144	25
240	32
398	40
640	50

Table 6.24 of SANS 10142-1

Determine the conduit size required to accommodate the supply conductors to a domestic electrical installation using the information given in the tables above. (3)

Copyright reserved

1.5 An electrician has to compile a list of all materials required to wire up an electrical installation and has to classify these into two categories, namely numbered parts and measured parts.

Differentiate between *numbered parts* and *measured parts.* (2)

1.6 State TWO disadvantages of metal conduit. (2)

1.7 FIGURE 1 below shows a circuit diagram of a geyser sub-circuit in a domestic electrical installation.

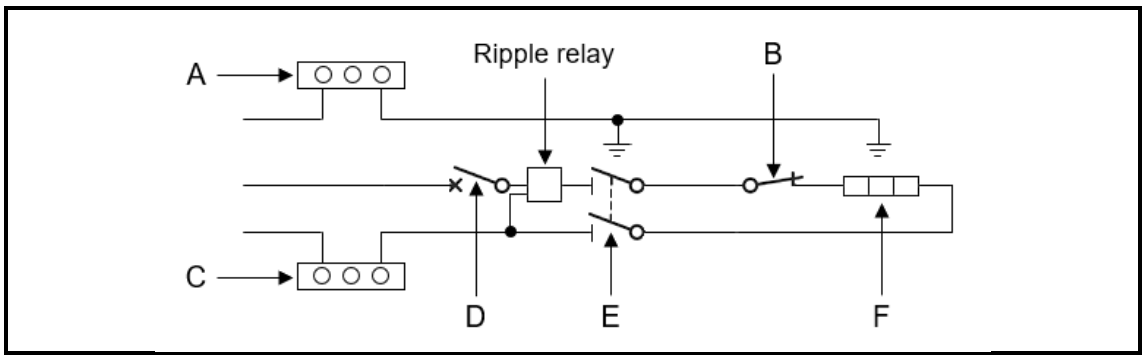

FIGURE 1

1.7.1 Name the components of this sub-circuit labelled A to F. Write only the answer next to the letter (A–F) in the ANSWER BOOK. (6)

1.7.2 Explain the function of a ripple relay. (2)

[25]

QUESTION 2

2.1 Indicate whether the following statements are TRUE or FALSE by writing only 'True' or 'False' next to the question number (2.1.1–2.1.10) in the ANSWER BOOK.

2.1.1 The test button on an earth leakage unit is used to test the sensitivity of the device.

2.1.2 The voltage drop between the point of supply and any point of outlet or terminals of fixed appliances shall not exceed 5% of the declared phase-to-neutral voltage.

2.1.3 Disconnect the installation and notify the supplier if the elevated voltage between the supply neutral and any external earth to the installation exceeds 25 V.

2.1.4 A minimum test voltage of 500 V must be used when testing the insulation resistance of a single-phase installation.

Copyright reserved

2.1.5 The insulation resistance between the phase conductor and the neutral conductor must be at least 1 MΩ.

2.1.6 Earth leakage protection is not required for a stove circuit when a stove coupler is used.

2.1.7 Electronic equipment such as dimmer switches, time delay devices, electronic starters for fluorescent lamps, earth leakage units and surge arresters need not be disconnected during an insulation resistance test.

2.1.8 The earth fault loop impedance at the main switch of a single-phase installation must be at least 1,92 Ω.

2.1.9 A polarity test ensures that all single-pole switching devices, fuses and circuit-breakers have been connected in the phase conductor.

2.1.10 A bonding conductor shall have a nominal cross-sectional area of at least 2,5 mm^2 copper or equivalent.

(10 × 1) (10)

2.2 An earth leakage unit is a device that is capable of detecting the flow of a specified or predetermined current from a circuit to earth, and of disconnecting, automatically and reliably, the affected circuit within a specified time when such current exceeds the specified or predetermined value.

2.2.1 State the sensitivity and overload ratings for an earth leakage unit installed in a domestic distribution board. (2)

2.2.2 What does SANS 10142-1 stipulate with regard to the conductors that must be disconnected when a single-phase earth leakage unit operates? (1)

2.3 Regulation 8.6.14 of SANS 10142-1: 2017 requires the polarity at the points of consumption in an installation to be tested.

Illustrate by means of a neat, fully labelled sketch how a polarity test can be carried out on an Edison screw lamp holder. (5)

2.4 Name the person authorised to issue a test report for the following:

2.4.1 Single-phase installation

2.4.2 Specialised installation

(2 × 1) (2)

2.5 State any FIVE items that must be inspected in an electrical installation to ensure that they comply with SANS 10142-1. (5)

[25]

Copyright reserved

QUESTION 3

3.1 Indicate whether each of the following readings obtained is ACCEPTABLE or UNACCEPTABLE by writing only 'Acceptable' or 'Unacceptable' next to the question number (3.1.1–3.1.6) in the ANSWER BOOK.

	COMPONENTS TESTED	READINGS OBTAINED
3.1.1	Fuse (resistance between end caps)	0 Ω
3.1.2	Armoured cable (insulation resistance between cores)	20 MΩ
3.1.3	Incandescent lamp filament (resistance across filament)	infinity
3.1.4	Armoured cable (insulation resistance between cores and earth)	0,2 Ω
3.1.5	Centrifugal switch (resistance across switch)	26,45 Ω
3.1.6	Earth leakage relay (resistance on earth leakage relay tester)	25 mA

(6 × 1) (6)

3.2 Define the term *maintenance procedure.* (2)

3.3 A risk assessment forms part of a company's safety rules and regulations and is an important step in protecting yourself and your co-workers from worksite hazards.

State FIVE key steps used to assess risks in the workplace. (5)

3.4 Give TWO observable signs that may point to the presence of a problem on an electrical appliance. (2)

[15]

QUESTION 4

4.1 Name TWO general classifications of electrical power distribution systems. (2)

4.2 Earthing systems are identified by codes such as TN-S, TN-C-S, TN-C, IT and TT.

4.2.1 Describe the TN-C-S earthing system. (2)

4.2.2 Which earthing system is not approved for use in South Africa? (1)

4.3 Briefly explain what is meant by a *work permit*. (1)

Copyright reserved

4.4 State FOUR reasons for earthing the neutral conductor on the supplier's side of a low-voltage system. (4)

[10]

QUESTION 5

5.1 High-pressure sodium (HPS) vapour lamps can be mounted in any position, are very efficient and can deliver approximately 100 to 150 lumens per watt.

Draw a neat, fully labelled circuit diagram of an HPS vapour lamp. (5)

5.2 Give ONE function for each of the following components of a fluorescent lamp or fitting:

5.2.1 Base

5.2.2 Starter

5.2.3 Capacitor

(3 × 1) (3)

5.3 An inductive load of 15 kW with a power factor of 0,89 is connected to a 220-V single-phase supply.

Determine the current taken by the load. (3)

5.4 The power factor of an alternating current system is defined as the ratio of the real (true) power to the apparent power.

5.4.1 Explain the term *unity power factor.* (1)

5.4.2 State TWO disadvantages of a low power factor. (2)

5.5 Give ONE method that can be used to save energy in our homes. (1)

[15]

Copyright reserved

QUESTION 6

6.1 Refer to FIGURE 2 below and label the different layers of the photovoltaic (PV) module labelled A−D. Write only the answer next to the letter (A–D) in the ANSWER BOOK.

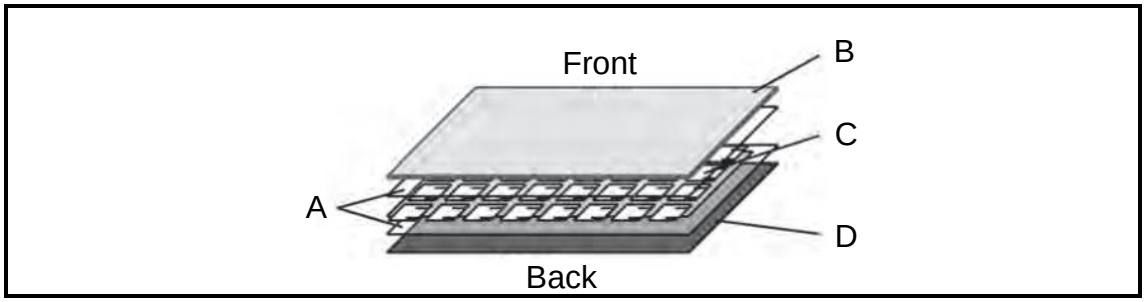

FIGURE 2 (4)

6.2 Give TWO advantages of installing a PV system. (2)

6.3 The efficiency of a solar thermal collector is directly related to heat losses from the collector surface.

State FOUR heat losses that occur in a solar thermal collector. (4)

[10]

TOTAL: 100

Copyright reserved