higher education & training

Department:
Higher Education and Training
REPUBLIC OF SOUTH AFRICA

MARKING GUIDELINE

NATIONAL CERTIFICATE (VOCATIONAL)

CONCRETE STRUCTURES
NQF LEVEL 3

27 November 2023

This marking guideline consists of 5 pages.

Copyright reserved

QUESTION 1

1.1

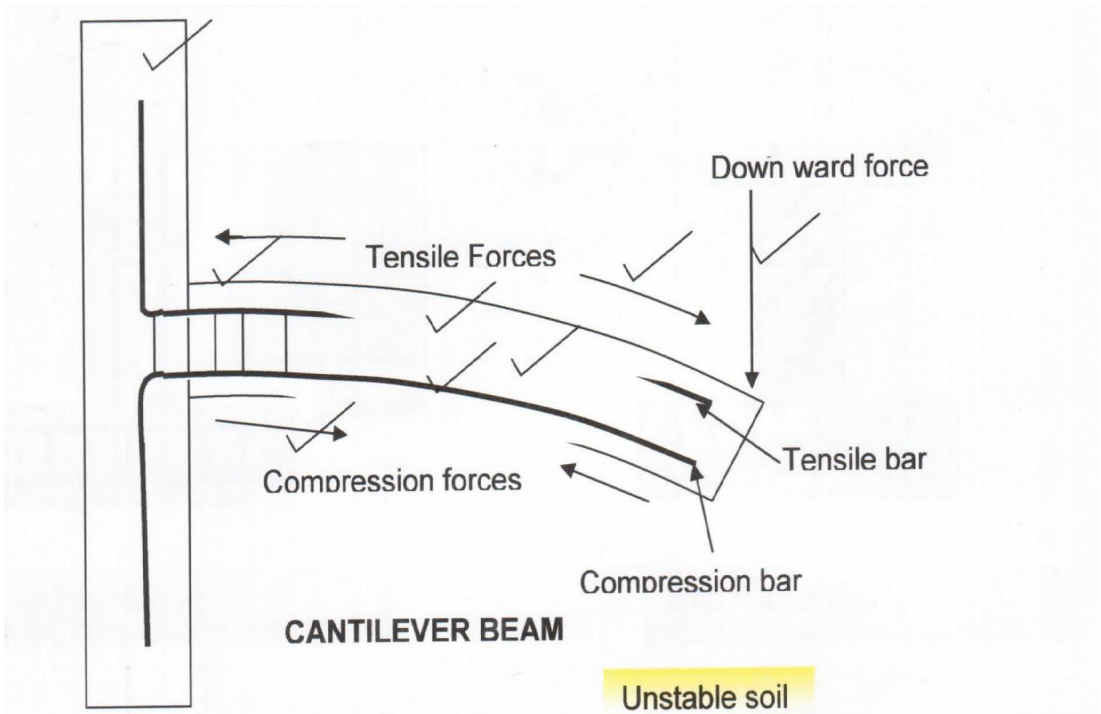

CANTILEVER BEAM

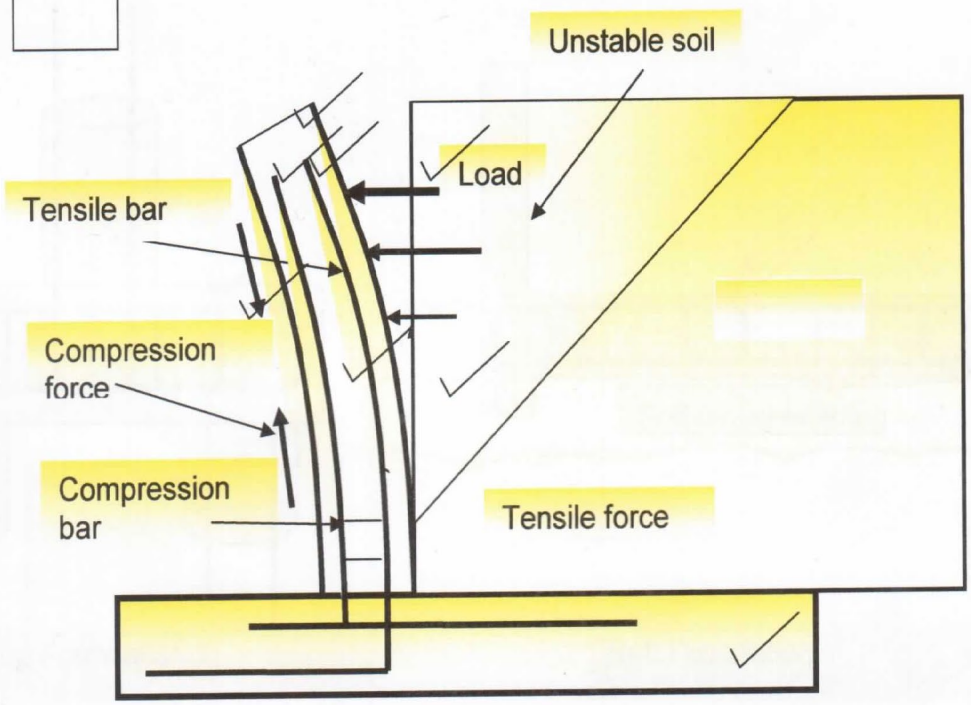

RETAINING WALL

Marking per drawing:

- The deflected beam and wall (1 x 3)
- Direction of external force (1 x 1)
- Tension and compression forces (1 x 2)
- Tensile and compression bar (1 x 2)
- Any TWO correct labels (2 x ½)
- Total [(9) x 2]

(18)

1.2 1.2.1 Steel corrosion (rust) expands inside concrete, forcing it to crack. (2)

1.2.2 Concrete is confined and restrained from moving by loads or temperature changes that cause concrete to crack. (2)

1.2.3 As ground around foundation settles, it can cause cracks. (1)

1.2.4 Temperature of freshly placed concrete will rise because of chemical reaction. If the concrete cools down or settles too quickly hairline cracks can appear. (2)

[25]

QUESTION 2

2.1 2.1.1 B
2.1.2 C
2.1.3 D
2.1.4 E
2.1.5 A

(5 × 1) (5)

2.2 Cold working is the changing of the shape and size of a metal at room temperature. (2)

2.3
- Drawing: Metal is pulled through a small hole in a die, which is a specification tool used in manufacturing industries to cut, shape and form a wide variety of products and components.
- Deep drawing: A punch forces the metal sheet into a die.
- Cold rolling: The metal strip is passed between two rolls that have only a narrow gap between them.
- Pressing: The metal sheet is pressed onto a shaped die or mould to form a complex shape, such as a car body panel. (4 × 2) (8)

2.4
- Paint the outer surface to give barrier protection.
- Apply membrane-type coating to surface of concrete structure.
- Apply epoxy to the reinforcement itself.
- Coat the steel in zinc by hot-dip galvanising.
- Use stainless steel as substitute. (5)

2.5
- It needs special lifting equipment.
- It is very expensive to use.
- It is difficult to change the amount of steel in the structure.
- It may not be very economical.
- It differs in size and can cause a lot of wastage from cut-offs.
- It is difficult to flatten after it is unrolled, which increases problems with installation. (Any 5 × 1) (5)

[25]

Copyright reserved

QUESTION 3

3.1 3.1.1 Alternate bars
3.1.2 Bottom

(2 × 1) (2)

3.2 3.2.1 EW − Each way
3.2.2 ABR − Alternate bars reversed
3.2.3 AL − Alternately
3.2.4 STG – Staggered

(4 × 2) (8)

3.3

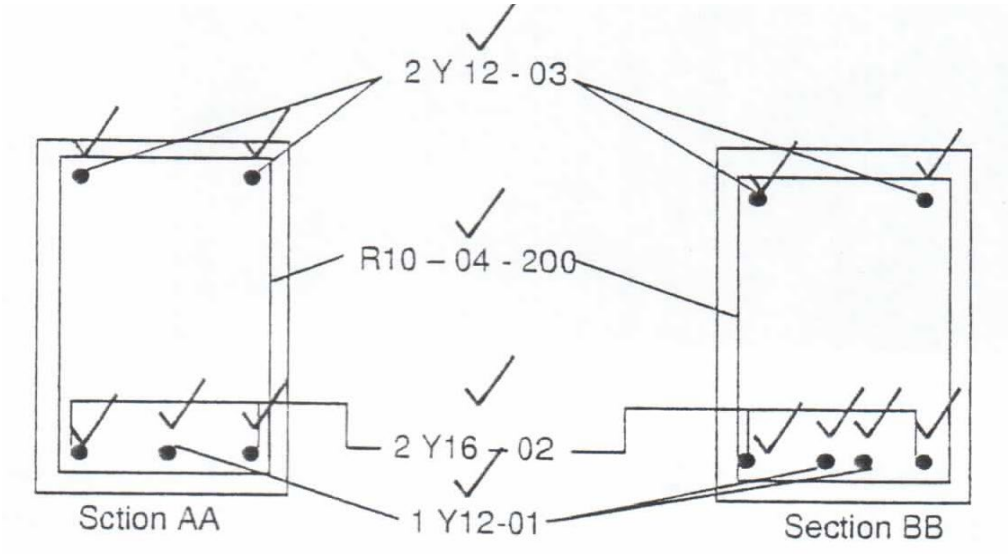

(15)
[25]

QUESTION 4

4.1

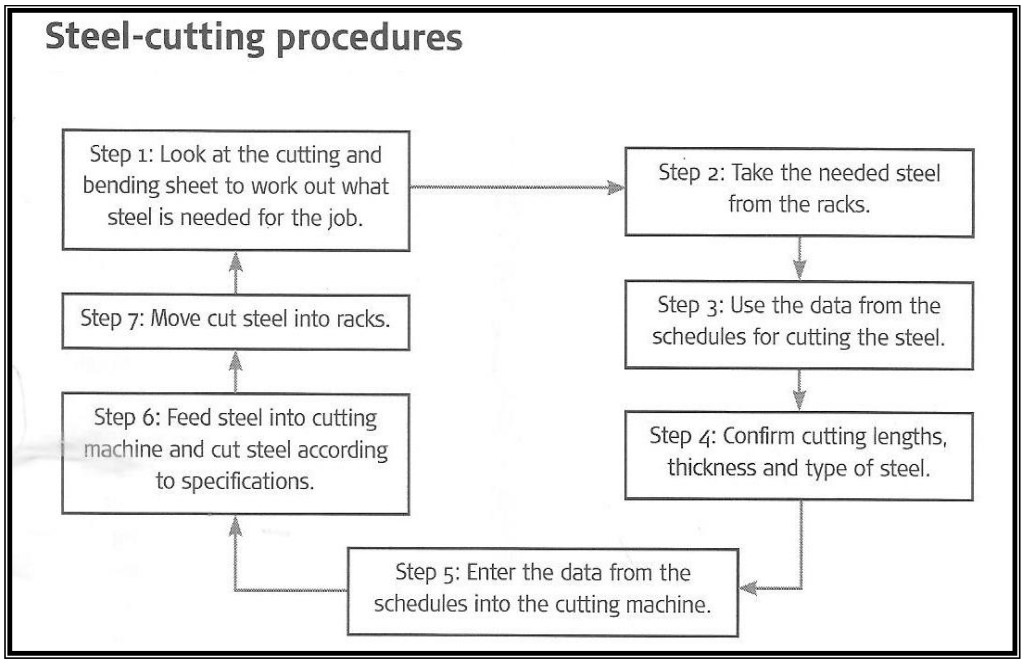

(7)

4.2

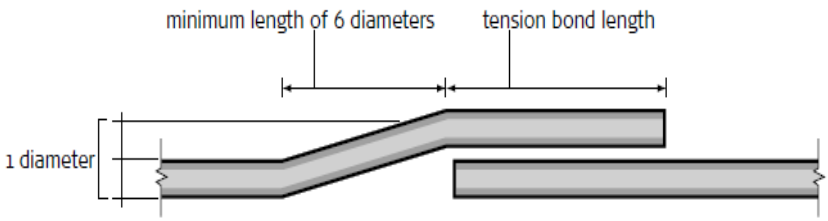

SPLICING BY CRANKING

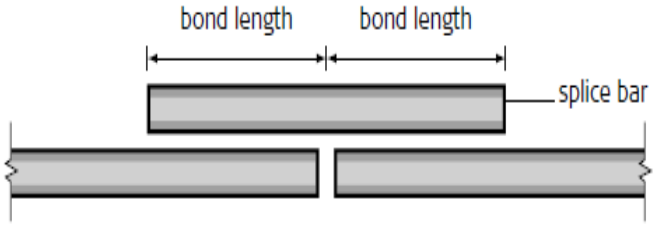

A SPLICE BAR

(2 × 5) (10)

4.3

4.3.1	ABC Contractors
4.3.2	137
4.3.3	243
4.3.4	52
4.3.5	R16
4.3.6	4250
4.3.7	Wall footings

(7 × 1) (7)

4.4

- They must check the cutter before cutting the steel.
- They must follow the steel cutter procedures.
- They must have all documents they will use.
- They must check the machinery and equipment they use to cut the steel.

(Any 1) (1)

[25]

TOTAL: 100

Copyright reserved