higher education & training

Department:
Higher Education and Training
REPUBLIC OF SOUTH AFRICA

# NATIONAL CERTIFICATE (VOCATIONAL)

# AUTOMOTIVE REPAIR AND MAINTENANCE
## NQF LEVEL 3

(6021033)

**27 November 2023 (X-paper)**
**09:00–12:00**

**This question paper consists of 7 pages.**

351Q1N2327

Copyright reserved

# DEPARTMENT OF HIGHER EDUCATION AND TRAINING
# REPUBLIC OF SOUTH AFRICA

NATIONAL CERTIFICATE (VOCATIONAL)
AUTOMOTIVE REPAIR AND MAINTENANCE
NQF LEVEL 3
TIME: 3 HOURS
MARKS: 100

---

**INSTRUCTIONS AND INFORMATION**

1. Answer all the questions.
2. Read all the questions carefully.
3. Number the answers according to the numbering system used in this question paper.
4. Use only a black or blue pen.
5. Write neatly and legibly.

---

Copyright reserved 

## QUESTION 1

1.1 Explain the meaning of the term, *stoichiometric mixture,* with regard to the air/fuel ratio in an internal combustion engine. (2)

1.2 Name the sensor that performs each of the following functions in an electronic fuel injection system:

1.2.1 Detects coolant temperature by means of an internal thermistor.

1.2.2 Located just before the catalytic convertor; senses whether the air/fuel ratio is richer or leaner.

1.2.3 Mounted on the throttle body butterfly spindle; converts throttle opening angle to a voltage and sends it to ECU.

(3 × 1) (3)

1.3 List any TWO basic differences between a *diesel engine* and a *petrol carburettor engine*. (2)

1.4 List the steps in which a cylinder compression test on an engine is performed in the correct order. (5)

1.5 Indicate whether the following statements are TRUE or FALSE by writing only 'True' or 'False' next to the question number (1.5.1–1.5.7) in the ANSWER BOOK.

1.5.1 When assembling an engine, torque cylinder head bolts according to manufacturer's specification.

1.5.2 A piston ring compressor is not required when fitting a piston into a cylinder.

1.5.3 Lubricate components to prevent rust while in storage.

1.5.4 It is not necessary to check and inspect components when receiving them back from an engineering workshop.

1.5.5 The inside micrometre is used to measure the clearance between a piston ring and a piston groove .

1.5.6 A camshaft is driven by a belt or chain that rotates at half the speed of the crankshaft.

1.5.7 Piston compression rings form a gas-tight seal between the piston and cylinder bore wall.

(7 × 1) (7)

1.6 Petrol fuel has an octane rating. How is diesel fuel rated? (1)

1.7 Define the term, *diesel knock*, in a diesel engine. (2)

**[22]**

Copyright reserve 

## QUESTION 2

2.1 List any FIVE tests that can be done on a starter motor before refitting it in a vehicle. (5)

2.2 Briefly explain the operation of the following starter motor components:

2.2.1 Armature

2.2.2 Starter solenoid

(2 × 2) (4)

2.3 A rectifier is an alternator component. State the function of the rectifier. (2)

2.4 FIGURE1 below shows some parts of an alternator.

Name the labelled parts by writing the answer next to the letter (A–E) in the ANSWER BOOK. (5)

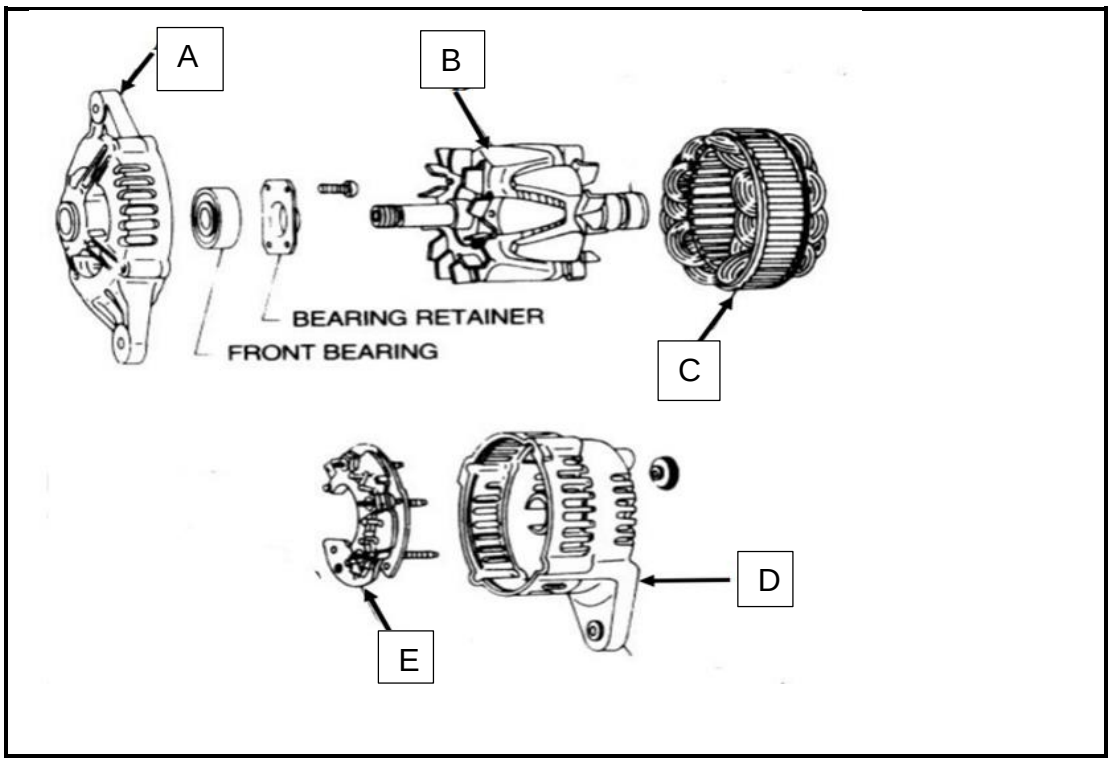


**FIGURE 1**

2.5 List any THREE components that form part of the following ignition system circuits:

2.5.1 Primary circuit (low-tension circuit)

2.5.2 Secondary circuit (high-tension circuit)

(2 × 3) (6)

2.6 Copy table below into the ANSWER BOOK to indicate the differences between a *hot* and a *cold spark plug*.

| Hot type | Cold type |
|---|---|
| | |

(2)

2.7 Is it advisable to touch high tension leads with your bare hands while the engine is running? Give a reason for your answer. (2)

**[26]**

## QUESTION 3

3.1 FIGURE 2 shows a type of suspension system.

Name the labelled parts by writing the answer next to the letter (A–F) in the ANSWER BOOK. (6)

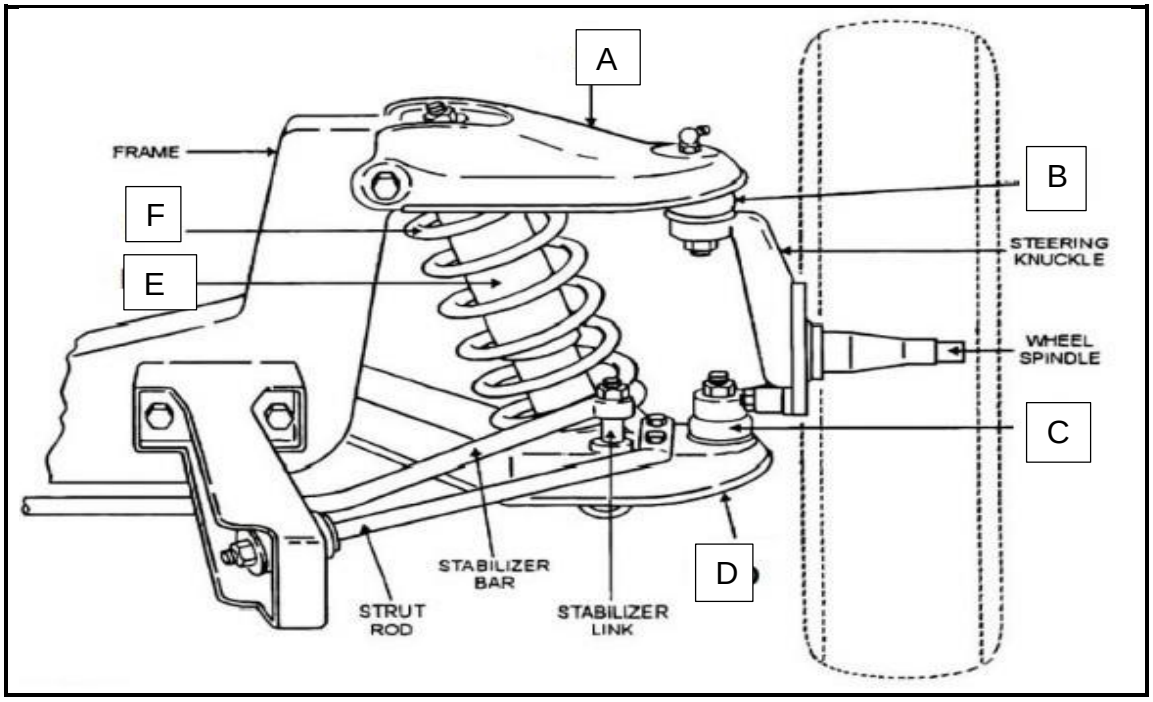


**FIGURE 2**

3.2 Name the type of suspension system in FIGURE 2. (2)

3.3 List any FIVE wheel alignment angles that can be checked when performing wheel alignment on a vehicle. (5)

3.4 List any FOUR pre-checks that need to be done on a wheel before it can be balanced. (4)

3.5 List FIVE items that one will check when inspecting the working condition of a wheel balancing machine. (5)

**[22]**

## QUESTION 4

4.1 Name any TWO components in a disc brake system which are not found in a drum brake system. (2)

4.2 Briefly explain the function of a brake booster in a vehicle's braking system. (2)

4.3 Diagnose any TWO possible causes for each of the following brake system problems:

4.3.1 No brakes

4.3.2 Spongy pedal

4.3.3 Brake squeal

(3 × 2) (6)

4.4 Choose a term from COLUMN B that matches a description in COLUMN A. Write only the letter (A–J) next to the question number (4.4.1–4.4.7) in the ANSWER BOOK.

| COLUMN A | | COLUMN B | |
|---|---|---|---|
| 4.4.1 | Type of a joint used in a Hotchkiss drive that allows length movement of the propeller shaft when demanded by the rear axle | A | side drive shaft |
| | | B | propeller shaft |
| | | C | collapsible spacer |
| 4.4.2 | Should not be re-used in a differential | D | thrust washer |
| 4.4.3 | Determines the remaining oxygen content in an exhaust emission pipe | E | lambda sensor |
| | | F | camshaft |
| 4.4.4 | Contact between crown wheel and pinion is too much to the heel rear end of the crown wheel teeth | G | excessive heel contact |
| | | H | glow plug |
| | | I | spark plug |
| 4.4.5 | A device used to aid a diesel engine starting during cold weather | J | slip joint |
| 4.4.6 | Responsible for opening valves | | |
| 4.4.7 | Shaft that transfers torque from the gearbox to the differential | | |

(7 × 1) (7)

4.5 Where will a tyre show excessive wear if it is:

4.5.1 Under-inflated

4.5.2 Over-inflated

(2 × 1) (2)

4.6 Name the type of material used to manufacture the following engine components:

4.6.1 Piston

4.6.2 Oil sump/pan

(2 × 1) (2)

**[21]**

**QUESTION 5**

5.1 List any FOUR safety procedures that must be followed when removing an engine from a vehicle. (4)

5.2 Name the tool that is used when performing or measuring the following tasks:

5.2.1 Removing a valve from the cylinder head

5.2.2 Measuring cylinder bore taper or ovality

5.2.3 Measuring the size of a piston

5.2.4 Measuring the piston ring groove clearance

5.2.5 Measuring the engine block for warpage

(5 × 1) (5)

**[9]**

**TOTAL: 100**

Copyright reserved