higher education & training

Department:
Higher Education and Training
REPUBLIC OF SOUTH AFRICA

NATIONAL CERTIFICATE (VOCATIONAL)

STORED PROGRAMME SYSTEMS
NQF LEVEL 4

(10040154)

16 November 2023 (X-paper)
09:00–12:00

This question paper consists of 6 pages.

111Q1N2316

Copyright reserved

DEPARTMENT OF HIGHER EDUCATION AND TRAINING
REPUBLIC OF SOUTH AFRICA

NATIONAL CERTIFICATE (VOCATIONAL)
STORED PROGRAMME SYSTEMS
NQF LEVEL 4
TIME: 3 HOURS
MARKS: 100

INSTRUCTIONS AND INFORMATION

1. Answer all the questions.
2. Read all the questions carefully.
3. Number the answers according to the numbering system used in this question paper.
4. Drawings should be labelled and neatly drawn.
5. Symbols should be drawn to the IEC standards.
6. All terminal numbering should be shown.
7. All labelling should be shown.
8. Use only a black or blue pen.
9. Write neatly and legibly.

Copyright reserved

QUESTION 1

1.1 Communication between machines and controllers is achieved at various levels of the organisation structure in an automated factory.

1.1.1 Name the form of control-organisation shown in FIGURE 1.

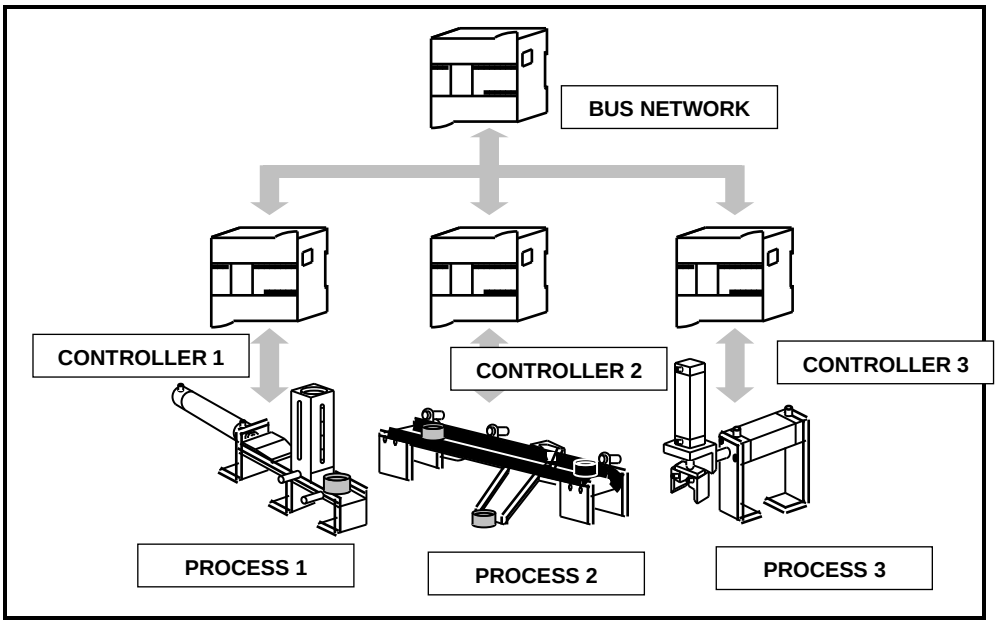

FIGURE 1 (1)

1.1.2 Identify the TWO PLC networking configurations that must be considered when making use of industrial Ethernet for communication. (2)

1.1.3 Draw a data flow block diagram that illustrates Ethernet communication between a Master (PLC_1) (IP 172.16.202.3) and SLAVE (PLC_2) (IP 172.16.202.7) connected PLCs controlling a remote pump motor (M_1) turned on by push button PB_1. (2 × 2) (4)

1.1.4 Explain what is *Ethernet communication*. (1)

1.2 Explain with the aid of a block diagram how modems are used in the communication process to show an analogue input signal being converted and transmitted to a remote station. (5)

Copyright reserved

1.3 Study the PLC ladder source code controlling a remote water pump motor, as shown in FIGURE 2:

Explain in the correct sequence, the execution steps that take place in the PLC source code, where Q1 is a green pilot lamp and Q3 is a red pilot lamp as shown below:

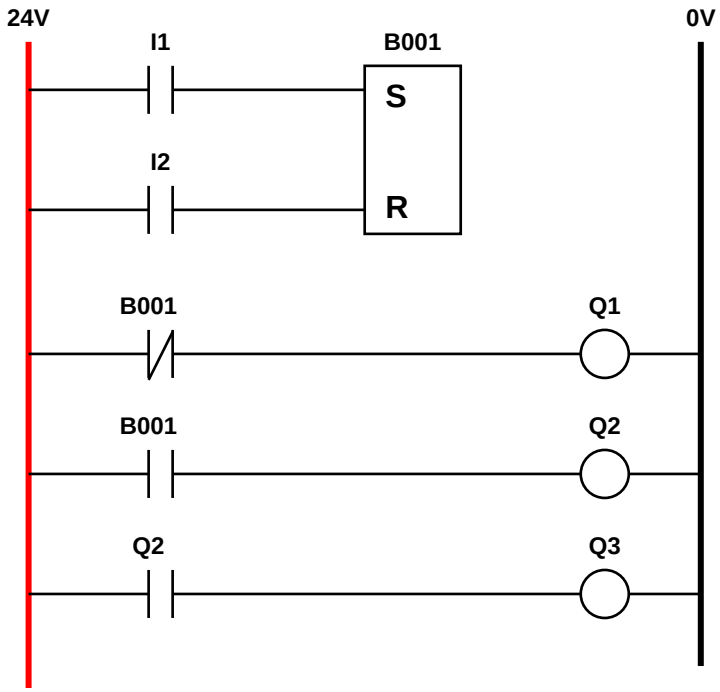

FIGURE 2

(7)
[20]

QUESTION 2

2.1 State SIX common industrial robot applications that the robotic systems are designed to perform. (6)

2.2 Explain SEVEN steps that you would follow when commissioning a mechatronic production line. (7)

2.3 List THREE possible BUS systems you have studied that can be used in the control levels of an automated factory in FIGURE 1. (3)

2.4 Explain the procedure for a short circuit or shorted data flow fault in an AS-I BUS system. (4)
[20]

Copyright reserved

QUESTION 3

FIGURE 3 shows the block diagram of the brewery process making use of the SCADA system.

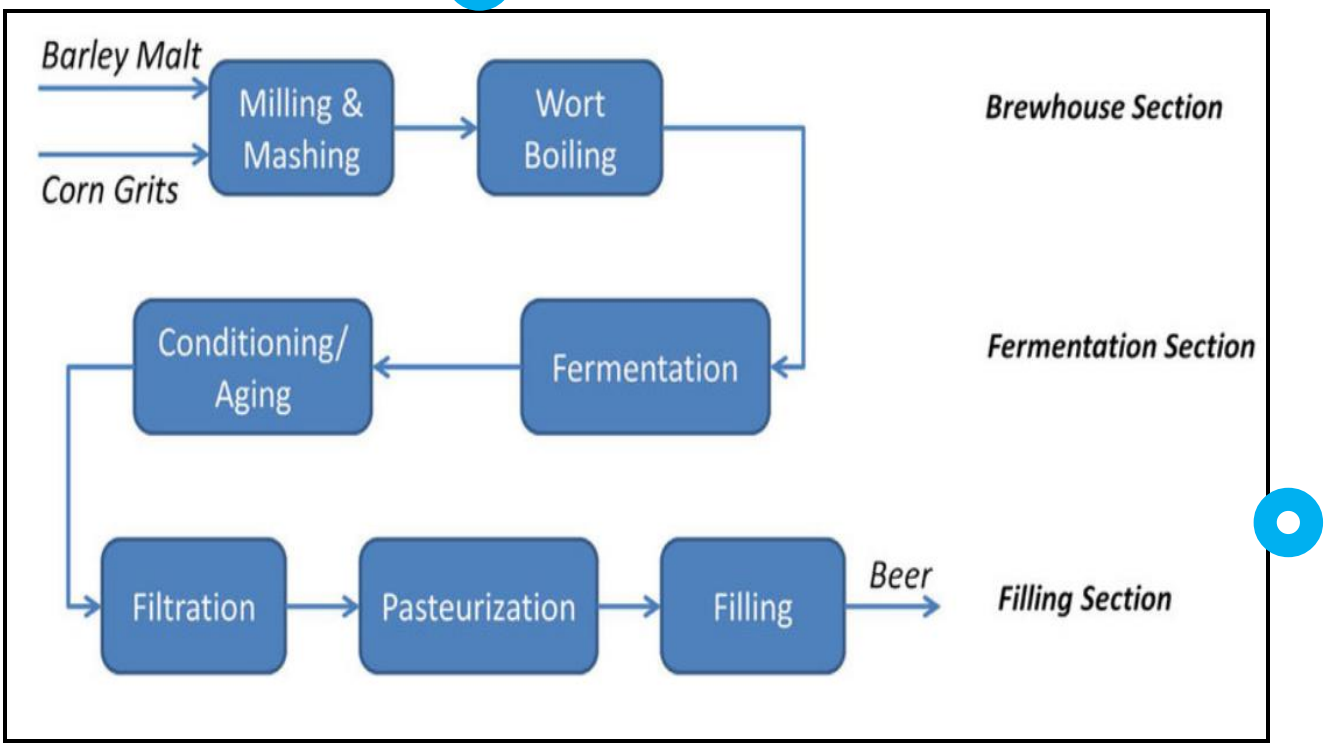

FIGURE 3

3.1 Explain what is meant by the acronym SCADA. (1)

3.2 List THREE control methods that can be achieved by a SCADA system. (3)

3.3 Explain what relevant safety you would employ for the brewing process shown in FIGURE 3. (6 × 1) (6)

3.4 Design a hard–wired safety circuit using a safety relay to achieve an acceptable safety standard. This safety circuit must show how a safety mat is used in a protected work envelope for the brewery process to be achieved. (10)
[20]

Copyright reserved

QUESTION 4

4.1 What is the purpose of using technical drawings in an automated system? (2 × 2) (4)

4.2 Explain the practical approach to follow when wiring up a PLC electrical connection diagram using the wiring diagram and coloured pencils. (2 × 2) (4)

4.3 Draw a wireless local network (WLAN) block diagram that will use an access point that will serve as a gateway between the cable network and the wireless network.

The following must be indicated:

- WLAN
- Managed Switch
- Operator front–end
- PLC
- 2 PCs
- MiniRouter (10)

4.4 Name TWO classified types of technical drawings. (2)
[20]

QUESTION 5

5.1 State FIVE fundamental items that will help to locate safety-related information necessary for safety planning. (5)

5.2 Identify FIVE causes of hazardous conditions if care is not taken in designing and implementing the mechatronic system in a workplace. (5)

5.3 List FOUR phases (stages) of the commissioning structure for the mechatronic system. (4)

5.4 PLC-controlled application system devices will fail for various reasons and troubleshooting procedures and techniques will have to be followed and applied to clear a malfunction and bring the system back into operation.

Explain how the PLC LED status indicators can be used to provide information on the field devices and wiring. (5)

5.5 Maintenance is categorised into THREE types.

Name ONE type. (1)
[20]

TOTAL: 100

Copyright reserved