higher education & training

Department:
Higher Education and Training
REPUBLIC OF SOUTH AFRICA

MARKING GUIDELINE

NATIONAL CERTIFICATE (VOCATIONAL)

STORED PROGRAMME SYSTEMS
NQF LEVEL 4

16 November 2023

This marking guideline consists of 6 pages.

Copyright reserved

QUESTION 1

1.1 1.1.1 Distributed control (1)

1.1.2
- Master–Slave
- Master−Master (2)

1.1.3

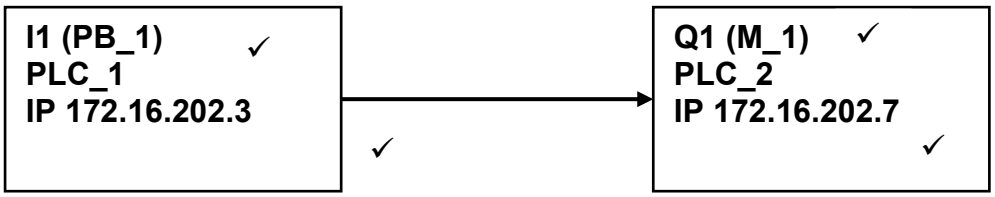

(Full marks are only awarded if fully labelled and the arrow is in the correct direction. Marker to use discretion) (2 × 2) (4)

1.1.4 Ethernet communication is a system that operates on TCP/IP protocol (1)

1.2

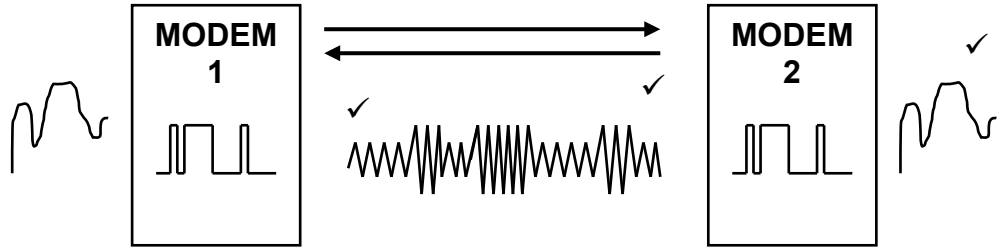

- Modem 1 converts the input analogue signal to be transmitted into a modulated signal for transmission.✓
- The transmitted signal received at Modem 2 is converted by a demodulation process into the original analogue signal format.✓ (5)

1.3 STEP 0: Once the PLC system is energized
STEP 1: The green pilot light (Q1) is energized indicating that the pump motor is not running.
STEP 2: When Pb_1 (I1) is activated the SR (B001) will energize and latch.
STEP 3 Turning *off* the green pilot lamp (Q1).
STEP 4: At the same time energizing the pump motor (Q2).
STEP 5: Which in turn will energize the red lamp (Q3).
STEP 6: When Pb_2 (I2) is activated SR (B001); the pump motor (Q2) and the red pilot lamp (Q3) will turn off.
STEP 7: At the same time, the green pilot (Q1) lamp will energize. (7)

[20]

QUESTION 2

2.1
- Arc welding
- Spot welding
- Material handling
- Machine tending
- Painting
- Picking, packing, and palletising
- Assembly
- Mechanical cutting, grinding, deburring and polishing
- Gluing, adhesive sealing and spraying materials
- Inspection, water jet cutting and soldering

(Discretion used when marking) (Any 6 × 1) (6)

2.2
- Carry out visual inspection
- Check the mechanical installation against the technical drawings
- Check the electrical installations against the electrical wiring diagram
- Perform functional tests on the subsystems and systems
- Verify the process verification against the design brief
- Check the contract/specification against the terms of reference
- Put the system into production

(Discretion used when marking) (7)

2.3
- Ethernet
- PROFIBUS
- Inter-BUS (3)

2.4
- Use the half-cut method.
- The cable is disconnected halfway and then turned on to check if any test indication is present.
- If the test indication comes on downstream the fault is upstream.
- If the test indication does not come on, the fault is downstream.

(Discretion used when marking) (4)
[20]

QUESTION 3

3.1 SCADA – Supervisory Control and Data Acquisition (1)

3.2
- Local control
- Distributed control
- Centralised control (3)

3.3
- Safety goggles
- Guards mechanical around the robot cell and conveyor for the three sections indicated in FIGURE 3
- Guard safety curtain to prevent entry into the beer bottling cell area
- Include indication lamps to give the status of the system
- Pressure mats to prevent going into certain bottleneck areas
- Provide machine system safety of E/stop and guards linked to the E/stop circuit.

(Discretion used when marking) (6 × 1) (6)

3.4

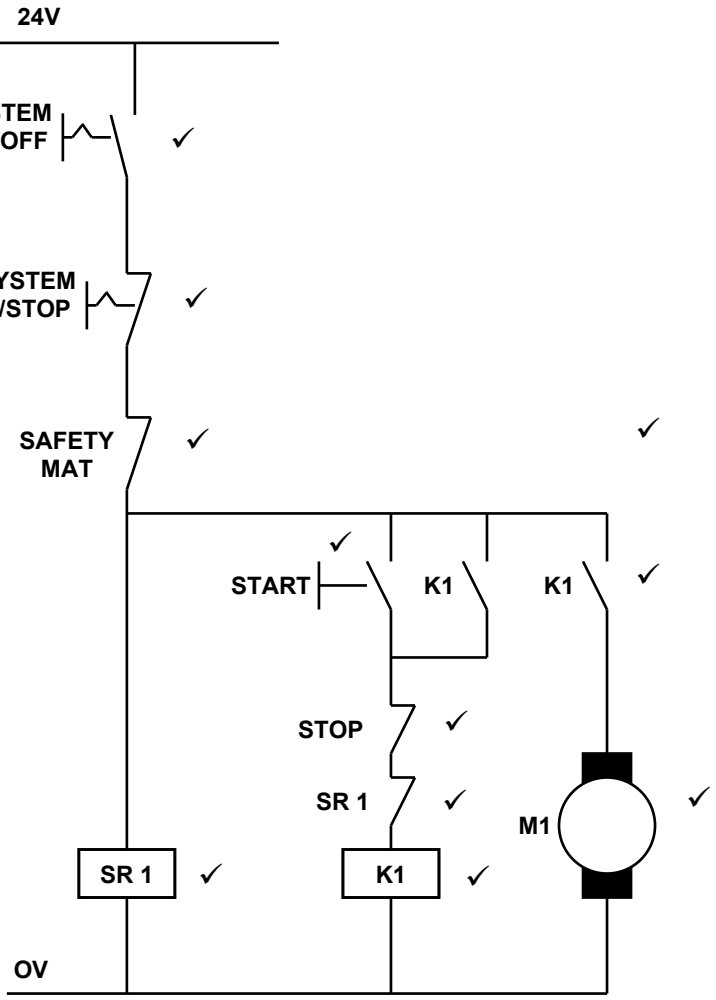

(Discretion used when marking) (10)
[20]

QUESTION 4

4.1 Detailed technical drawings communicate the design intent of the item to be manufactured and assembled.✓✓ They help the manufacturer understand how to build or construct something to a specific size, form, and function to enable it to work correctly.✓✓ (Discretion used when marking) (2 × 2) (4)

4.2 The wiring diagram must be read and interpreted, and each wire must be connected to the correct termination✓✓ and insert a line on the wiring diagram in say red – indicating the wire has been wired in.✓✓
(Discretion to be used when marking) (2 × 2) (4)

4.3

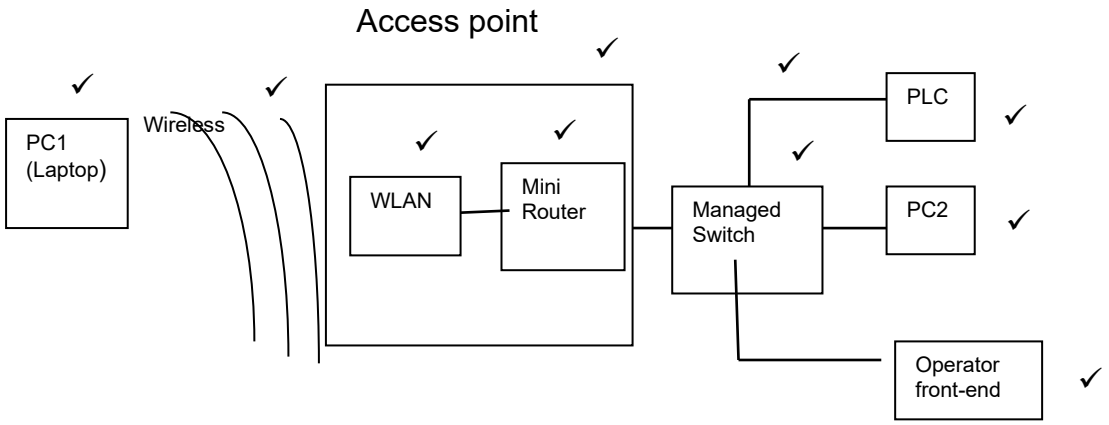

(Discretion used when marking) (10)

4.4
- Electro–technical drawing
- Mechanical drawing (2)

[20]

QUESTION 5

5.1
- General Standards for Industrial Control and Systems.
- Standards for Industrial systems.
- Standards for Enclosures for Industrial Control systems.
- The National Electrical Code (SANS 1042).
- Occupational Health and Safety Act of 1993.

(Discretion used when marking) (5)

5.2
- Defective construction or poor design of components.
- Omitted isolation or tripping hazard in the installation or design.
- Lack of knowledge concerning hazards.
- The pressure to meet installation.
- Lack of experience.

(Discretion used when marking) (5)

5.3
- Installation stage
- Preliminary stage
- Systems stage
- Product stage (4)

5.4
- When the input device is activated, an LED will indicate its status.
- If a NO input device is activated, the input status LED will light up,
- and if the NC input device is activated, the input status LED will go out.
- If a wire is an open circuit or termination is loose,
- the output LED will light up indicating that the program control logic has activated the output.

(Discretion used when marking) (5)

5.5
- Corrective maintenance
- Planned/scheduled maintenance
- Emergency corrective maintenance (Any ONE) (1)

[20]

TOTAL: 100

Copyright reserved