higher education & training

Department:
Higher Education and Training
REPUBLIC OF SOUTH AFRICA

NATIONAL CERTIFICATE (VOCATIONAL)

PROCESS CONTROL
NQF LEVEL 4

(6050414)

14 November 2022 (X-paper)
09:00–12:00

This question paper consists of 7 pages.

285Q1N2214

Copyright reserved

TIME: 3 HOURS
MARKS: 100

INSTRUCTIONS AND INFORMATION

1. Answer all the questions.
2. Read all the questions carefully.
3. Number the answers according to the numbering system used in this question paper.
4. Start each section on a new page.
5. Use only a black or blue pen.
6. Write neatly and legibly.

Copyright reserved

SECTION A

QUESTION 1

Various options are provided as possible answers to the following questions. Choose the answer and write only the letter (A–D) next to the question number (1.1–1.5) in the ANSWER BOOK.

1.1 Steps taken when problems in quality control are identified and rectified:

A Adjustment
B Deviation
C Conformance
D Corrective action

1.2 It is not an example of a process variable:

A Data
B Density
C Input materials
D Mass

1.3 The symbol for standard deviation is …

A σ
B μ
C £
D ß

1.4 It can perform advanced control functions:

A DCS
B CO
C RTU
D SCADA

1.5 When a process is unstable, it …

A operates within the control limits.
B operates far away from the limits.
C operates within control limits but is going out of control.
D operates outside the control limits.

(5 × 2) **[10]**

QUESTION 2

Choose an item from COLUMN B that matches a description in COLUMN A. Write only the letter (A–J) next to the question number (2.1–2.5) in the ANSWER BOOK.

COLUMN A		COLUMN B	
2.1	A system that is used to automate a process in a plant	A	data capturing
2.2	It allows the operator to formulate and implement a human decision in an automatic process	B	selective control
2.3	Process where data is stored in a computer	C	manual control
2.4	Process control operations performed by people	D	DCS
2.5	It is the other name for override control	E	automatic control
		F	process simulation
		G	data retrieval
		H	SCADA
		I	cascade control
		J	process control interface

(5 × 1) **[5]**

QUESTION 3

Indicate whether the following statements are TRUE or FALSE by writing only 'True' or 'False' next to the question number (3.1–3.5) in the ANSWER BOOK.

3.1 Control charts can be used to see whether the process is in control, or out of control and unstable.

3.2 Cyclic conditions happen repeatedly.

3.3 Automated shut-down procedures are not important in the plant.

3.4 The control valve changes the temperature in the correct direction to maintain a constant ratio.

3.5 PLCs have the slowest response time.

(5 × 1) **[5]**

TOTAL SECTION A: 20

SECTION B

QUESTION 4

4.1 The following terms are used in process control.

Define each term:

4.1.1 Deviation

4.1.2 Specifications

4.1.3 Control limits

(3 × 2) (6)

4.2 Draw a control chart indicating the following:

4.2.1 Cycle

4.2.2 Trends

(2 × 2) (4)

4.3 Describe the corrective action/preventative action (CAPA) process that is used in the industry for detecting and eliminating problems. (5)

4.4 pH is defined as the logarithm of the hydronium-ion concentration.

4.4.1 What is the range of a pH scale? (2)

4.4.2 Name the instrument that measures pH. (2)

4.4.3 Name TWO types of electrodes found within the pH sensor. (2)

4.4.4 Calculate the pH of 0,09 M sulphuric acid. (4)

[25]

QUESTION 5

5.1 Define the term *information flow*. (2)

5.2 Describe the common function of SCADA and DCS. (2)

5.3 Explain the meaning of the following statements:

5.3.1 DCS is process oriented.

5.3.2 SCADA is data-gathering oriented.

(2 × 2) (4)

Copyright reserved

5.4 List NINE components of DCS. (9)

5.5 Explain the FIVE purposes of a DCS screen. (5)

5.6 Provide the names of the following pictorials:

5.6.1

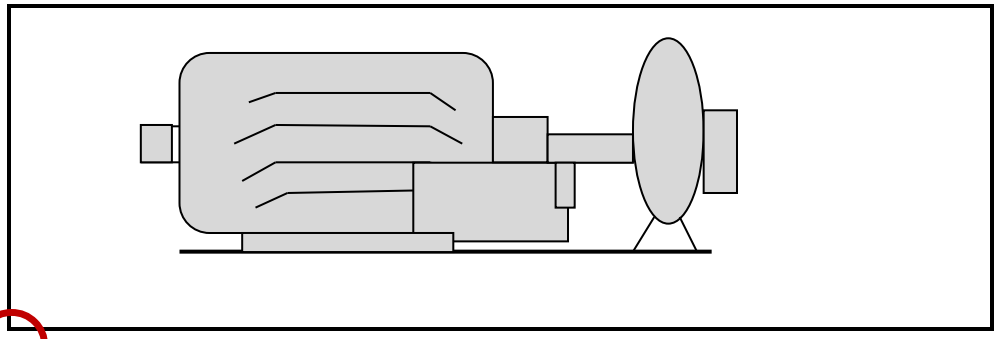

5.6.2

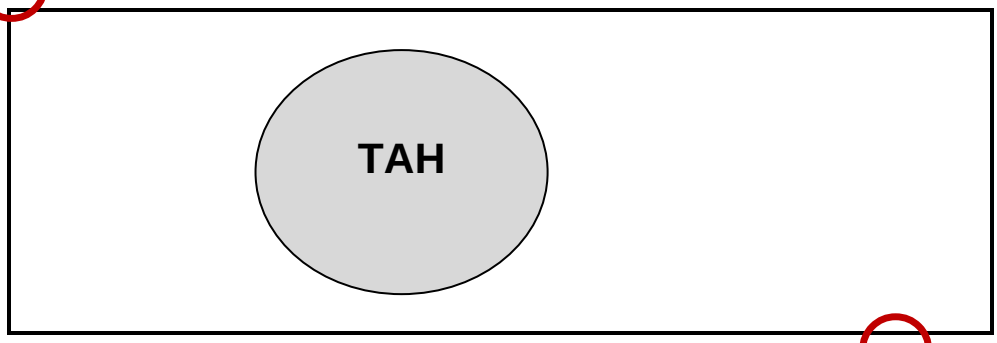

5.6.3

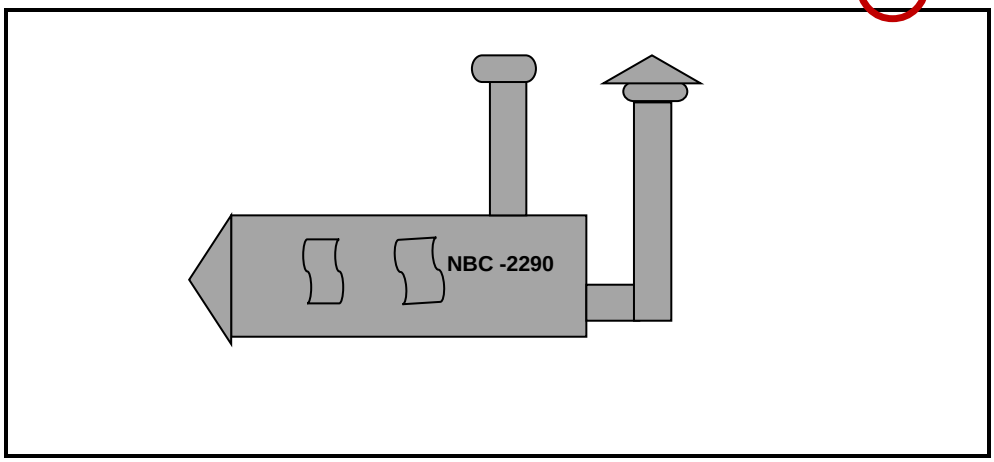

(3 × 2) (6)

5.7 Draw the following ISO PFD symbols:

5.7.1 Boiler

5.7.2 Cooling tower

5.7.3 Vessel

(3 × 2) (6)

[34]

QUESTION 6

6.1 State SIX reasons for shutting down a plant. (6)

6.2 Name THREE types of automatic control systems. (3)

6.3 Explain TWO functions of automatic control systems. (2)

6.4 One of the ways of achieving ratio control is by using ratio control with a constant multiplier.

Draw a flow diagram to illustrate a ratio control with a constant multiplier. (10)
[21]

TOTAL SECTION B: 80
GRAND TOTAL: 100

Copyright reserved