higher education & training

Department:
Higher Education and Training
REPUBLIC OF SOUTH AFRICA

NATIONAL CERTIFICATE (VOCATIONAL)

PLUMBING
NQF LEVEL 4

(12030544)

28 November 2023 (X-paper)
09:00–12:00

This question paper consists of 6 pages.

485Q1N2328

Copyright reserved

DEPARTMENT OF HIGHER EDUCATION AND TRAINING
REPUBLIC OF SOUTH AFRICA

NATIONAL CERTIFICATE (VOCATIONAL)
PLUMBING
NQF LEVEL 4
TIME: 3 HOURS
MARKS: 100

INSTRUCTIONS AND INFORMATION

1. Answer all the questions.
2. Read all the questions carefully.
3. Number the answers according to the numbering system used in this question paper.
4. Start each question on a new page.
5. Use only a black or a blue pen.
6. Write neatly and legibly.

Copyright reserved

QUESTION 1: BASIC BUILDING WORK AND BUILDING MANHOLES

1.1 Name the steps (in sequential order) to indicate the use of TWO straight edges and a spirit level to check whether a foundation is level. (4)

1.2 Give the name of a tool that can be used to remove excess mortar from a bed joint. (1)

1.3 Describe a manhole and give the suggested depth and minimum diameter thereof. (3)

1.4 How would you best describe a valve box and its purpose. (2)

[10]

QUESTION 2: BELOW-GROUND DRAINAGE SYSTEMS

2.1 What is the most common and efficient gradient for a 100 mm diameter pipe? (1)

2.2 Why is it advisable not to excavate any trenches too far in advance before laying any pipes? (2)

2.3 Explain the term, *bedding*. (2)

2.4 FIGURE 1 below shows an inspection chamber.

Name the items in the sketch by writing only the name next to the letters (A–D) in your ANSWER BOOK. (4)

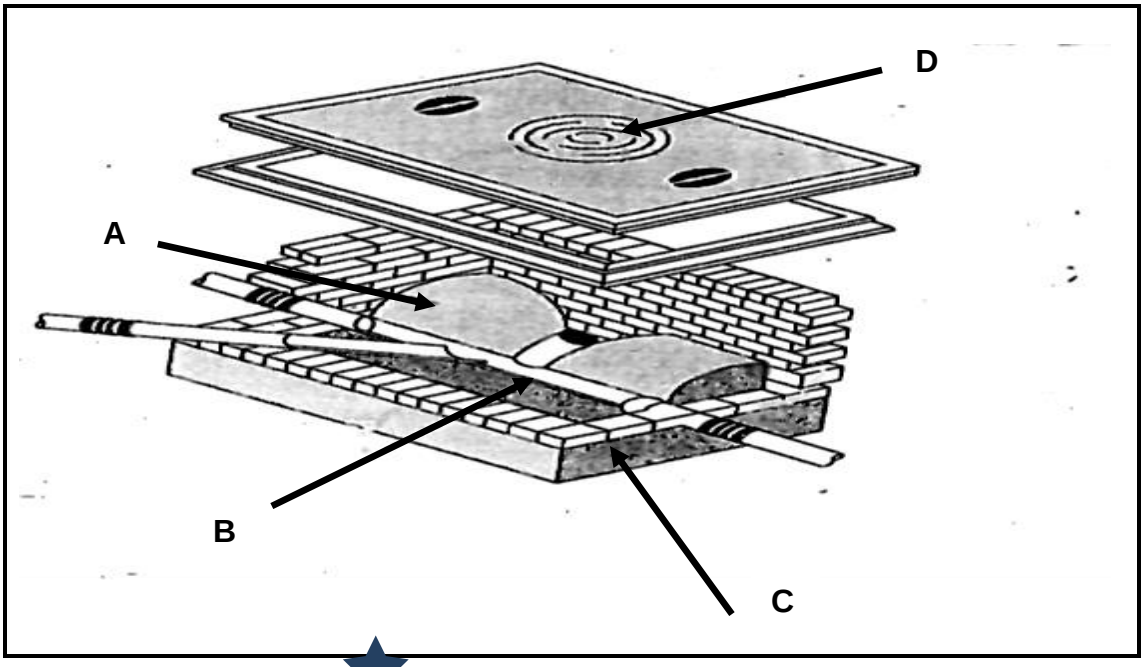

FIGURE 1

2.5 List the names of THREE manuals that could be consulted for the purpose of laying drain pipes. (3)

2.6 Give the suggested thickness of the back-fill layers when compacting it by hand? (1)

2.7 Name TWO kinds of air tests that can be used to detect leaks. (2)

2.8 Who may give the instruction for a test to be carried out on a sewer or any section thereof? (1)

2.9 Briefly explain why a water test is used and the process that must be followed. (4)

[20]

QUESTION 3: PLUMBING MAINTENANCE AND REPAIRS

3.1 What will happen when washers are old and brittle or badly positioned? (1)

3.2 List THREE tools that can be used to repair a leaking tap. (3)

3.3 FIGURE 2 below shows a sketch of a rubber gasket to seal small leaks in GMS pipes. Write only the name next to the letters (A–D) in your ANSER BOOK. (4)

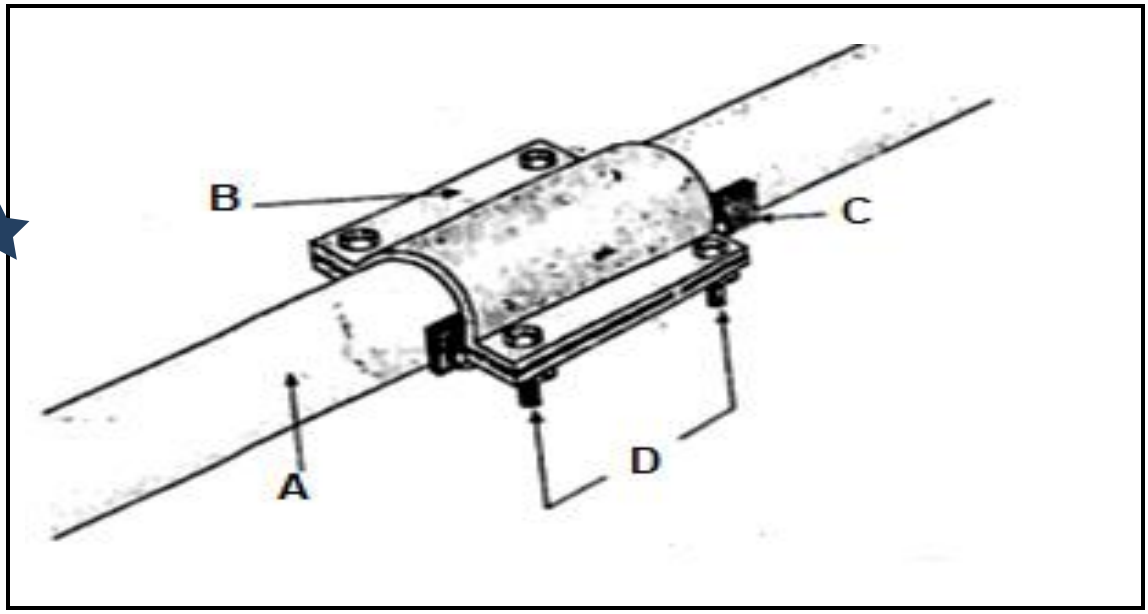

FIGURE 2

3.4 Name FIVE important steps that should be followed, when replacing a pressure relief valve. (5)

3.5 Why is it not advisable to use beige coloured fittings above drainage? (1)

3.6 List the FOUR steps to follow when repairing a section of damaged waste, soil, and vent pipes. (4)

3.7 What can be used to remove obstructions or blockages from drainage systems. (2)

[20]

Copyright reserved

QUESTION 4: BOX GUTTERS AND CHIMNEY FLASHING

4.1 Name the most common tool generally used, to cut GMS sheet metal. (1)

4.2 How would you best describe a box gutter. (2)

4.3 Which is the most suitable angle, to bend an abutment flashing? (1)

4.4 Name THREE types of chimney flashing. (3)

4.5 What is meant by the term, *pitch*? (2)

4.6 List the SIX steps (in sequential order) that should be followed when fabricating a chimney flashing. (6)

[15]

QUESTION 5: INSTALLING A SOLAR WATER HEATER

5.1 What would the effect on the earth be if there was no heat from the sun? (1)

5.2 Explain the term, *solar energy*? (2)

5.3 Name TWO fundamental requirements for an efficient solar water heating system. (2)

5.4 Give THREE types of solar collectors. (3)

5.5 Why should a bath collector only be installed in mild free climates? (1)

5.6 Indicate whether the following statements are TRUE or FALSE by writing only 'True' or 'False' next to the question number (5.6.1–5.6.5) in the ANSWER BOOK.

5.6.1 During the winter integral collectors' storage systems (ICS) must be drained or protected from freezing.

5.6.2 Glazed plate collectors consist of parallel rows of transparent glass tubes.

5.6.3 Conventional heaters remain the most popular types of water heating systems for the home.

5.6.4 A passive solar water heater relies on electric pumps to circulate water through the collector.

5.6.5 Heat exchangers transfer heat from the fluid to the water stored in the tank.

(5 × 1) (5)

5.7 What is meant by *standby heat loss*? (2)

5.8 What is an important factor to keep in mind when installing a solar collector? (1)

5.9 Before a solar collector can be installed, a site survey must be done. List FIVE important checks during the survey that must be considered. (5)

5.10 List THREE steps that should be followed when positioning a solar hot water storage cylinder. (3)

[25]

QUESTION 6: BASIC BUSSNESS CONCEPTS

6.1 Why is it important to do market research before starting a new business? (1)

6.2 What is a *business plan?* (2)

6.3 James runs a business and has R400 000 in the bank.
He quotes R600 000 for a job that will last for four months.
He needs to buy material and pay other expenses.

Material: R70 000

Expenses:
Wages = R30 000
Transport = R20 000
Rent = R10 000

Draw a graph (bar chart) showing James's cash flow projection.

Clearly indicate what each bar represents. (7)

[10]

TOTAL: 100

Copyright reserved