-

higher education & training

Department:
Higher Education and Training
REPUBLIC OF SOUTH AFRICA

NATIONAL CERTIFICATE (VOCATIONAL)

MULTIMEDIA SERVICES
NQF LEVEL 4

(10040184)

15 November 2022 (X-Paper)
09:00–12:00

This question paper consists of 10 pages.

335Q1N2215

Copyright reserved

TIME: 3 HOURS
MARKS: 150

INSTRUCTIONS AND INFORMATION

1. Read all the questions carefully.
2. Answer all the questions.
3. Number the answers according to the numbering system used in this question paper.
4. Start each question on a new page.
5. Write neatly and legibly.

Copyright reserved

SECTION A

QUESTION 1

1.1 Indicate whether the following statements are TRUE or FALSE. Choose the answer and write only 'True' or 'False' next to the question number (1.1.1–1.1.15) in the ANSWER BOOK.

1.1.1 Adware is a type of software that displays unwanted advertising on a computing system to generate revenue for its developers.

1.1.2 Android is a Linux-based operating system that is designed primarily for mobile touch-screen devices like tablets and smartphones.

1.1.3 An internet browser can never be used by hackers to attack websites.

1.1.4 A hacker is an individual who uses their computer knowledge to breach a computer system or network

1.1.5 A firewall is used to protect networks from all authorised access while permitting hackers and Trojan horses to pass.

1.1.6 A virus is a form of useful software that prevents a system or computer damage or alterations to the data on the system.

1.1.7 Phishing is an attempt to extract information from users by pretending to be a trustworthy person or organisation.

1.1.8 To *exploit* is to attack a weakness in a computer system, program, or network to accomplish a malicious action.

1.1.9 *Deterrence* means to assist an attacker to carry out his attack or to aid an ongoing attack.

1.1.10 Spyware is very good software that protects the computer user by capturing keystrokes, emails, and documents, or even turning on the video camera.

1.1.11 A tweet is a message sent via the Twitter social network. Tweets are short messages that are limited to 140 characters.

1.1.12 To *prevent* refers to severely limiting the likelihood of a particular intrusion, to succeed.

1.1.13 Access control helps determine the rights that site visitors have on a website.

1.1.14 Error messages never leak information.

1.1.15 Social engineering is the art of obtaining information illegitimately by deceiving or manipulating people who have legitimate access to that information.

(15 × 1) (15)

Copyright reserved

1.2 Various options are given as possible answers to the following questions. Choose the answer and write only the letter (A–D) next to the question number (1.2.1–1.2.10) in the ANSWER BOOK.

1.2.1 What is the function of network interface cards?

A To connect the clients, servers, and peripherals to the network through a port.
B To allow segmentation of a large network into smaller, efficient networks.
C To connect networks with different protocols like TCP/IP.
D To boost the signal between two cable segments or wireless access points.

1.2.2 A … is a device that is used to boost the signal between two cable segments or wireless access points.

A booster
B repeater
C switch
D router

1.2.3 The device that provides a central connection point for network cables is known as…

A domain server
B hub
C network card
D router

1.2.4 A … is a device that connects networks with different protocols.

A FTP server
B power supply
C gateway
D proxy server

1.2.5 A … is a device that helps to prevent congestion and data collisions.

A switch
B network adapter
C modem
D webserver

1.2.6 The device that is used to connect several LANs is called …

A router.
B repeater.
C bridge.
D switch.

1.2.7 The full form of WLAN is …

A wide local area network.
B wireless local area network.
C wireless land access network.
D wireless local area node.

1.2.8 … is a physical or logical arrangement of networks.

A Mesh
B Routing
C Networking
D Topology

1.2.9 A central controller or hub forms part of a … network.

A ring
B mesh
C star
D bus

1.2.10 A … topology requires a multipoint connection.

A star
B mesh
C ring
D bus

(10 × 1) (10)

TOTAL SECTION A: 25

SECTION B

QUESTION 2

2.1 Explain the primary function of a domain controller. (4)

2.2 Study the diagram below and answer the questions that follow:

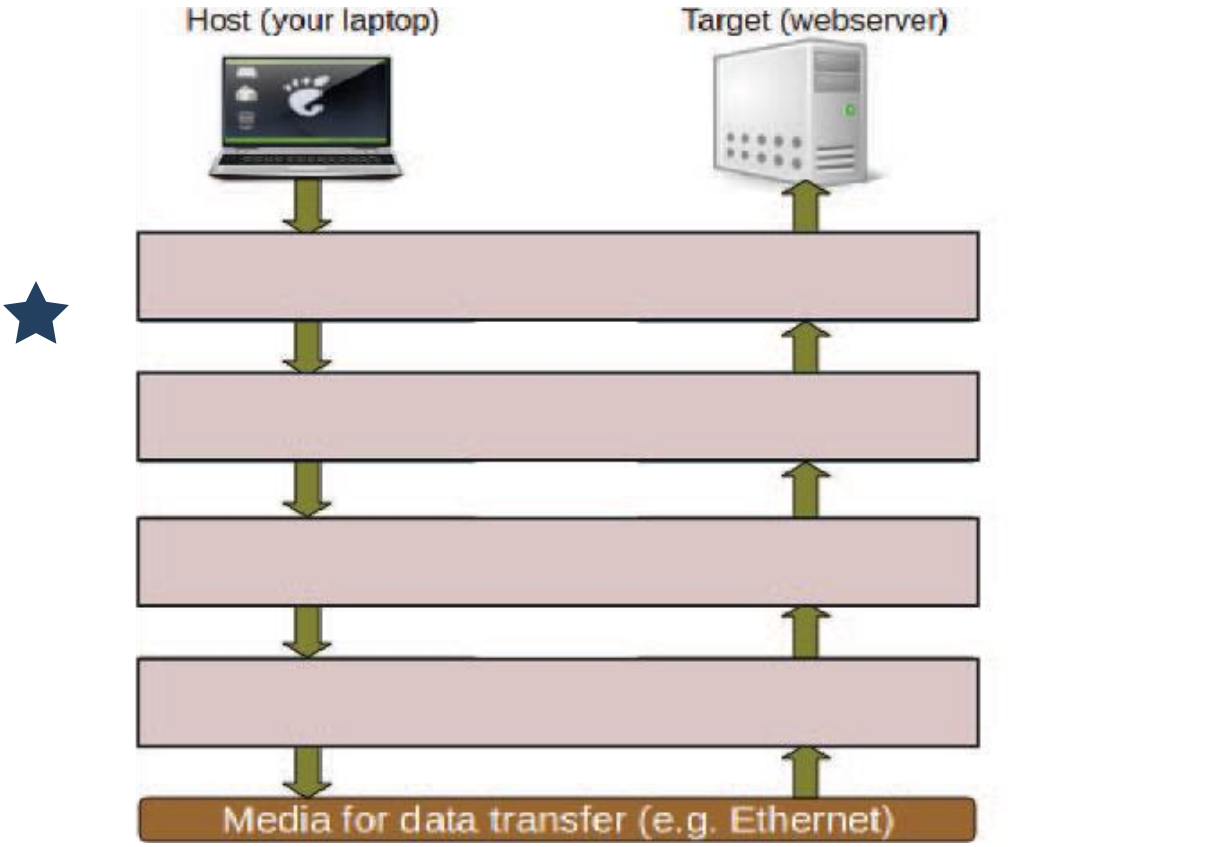

[Source: *www.thegeekstuff.com*]

Identify the FOUR layers of communication protocols shown above. (4)

2.3 Discuss how the following local security server policies are used:

2.3.1 Password history. (2)

2.3.2 Password complexity. (3)

2.3.3 Log-in attempts. (2)

2.3.4 Password age (expire policy). (2)

2.4 Determine the purpose of the following code when used in HTML 5:

2.4.1 <h1>

2.4.2

(2 × 2) (4)

2.5 Analyse the purpose of a server. (4)
[25]

QUESTION 3

3.1 List FIVE advantages of using a database management system (DBMS). (5)

3.2 Identify and explain the relationships that exist in a database as depicted below:

3.2.1



3.2.2



3.2.3

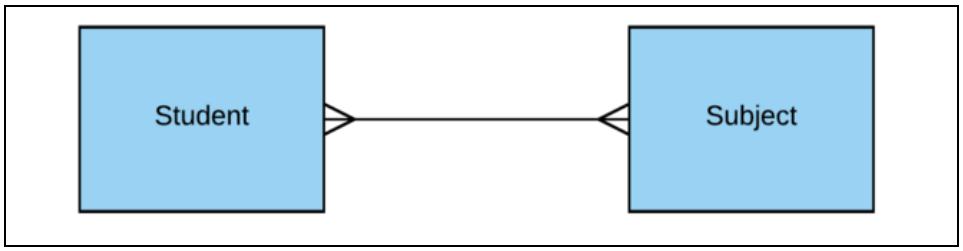

[Source: *https://wikimedia.org*]

(3 × 3) (9)

3.3 Consider the following tables in the database named *Firm db* and answer the questions that follow:

Employee (Emp_no, Name, Emp_city)
Company (Emp_no, Company_name, Salary)

Produce the SQL query to:

3.3.1 Display the employee's name and the and the company name. (4)

3.3.2 Display the employee's name, employee's city, company name and salary of all the employees whose salary >10000. (5)

3.4 Produce the SQL code that will create a full backup of a database named *Future Bank*. (2)

[25]

QUESTION 4

4.1 Discuss any SIX aspects that should be considered during the planning phase of a website. (6 × 2) (12)

4.2 Name the EIGHT steps involved in the development process of a website. (8)

4.3 List TWO elements that should be included in each of the following sections of a website user interface:

4.3.1 Header section

4.3.2 Footer section (2 × 2) (4)

4.4 Name ONE common navigation tool on websites. (1)

[25]

QUESTION 5

5.1 The following sections of a website are taken from a working website on the internet. Write the HTML code that is needed to create each of the following sections. Write the HTML code next to the question number (5.1.1–5.1.4) in the ANSWER BOOK.

5.1.1

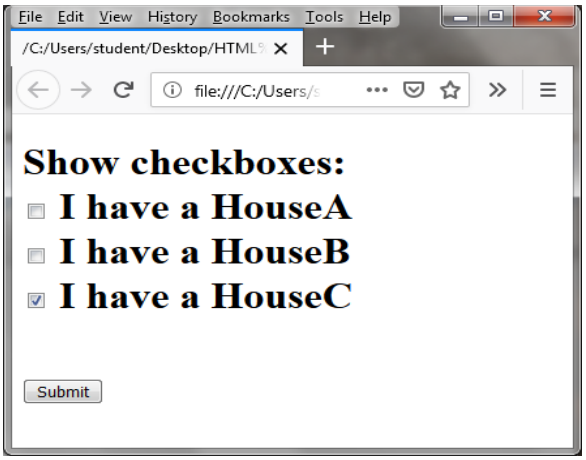

5.1.2

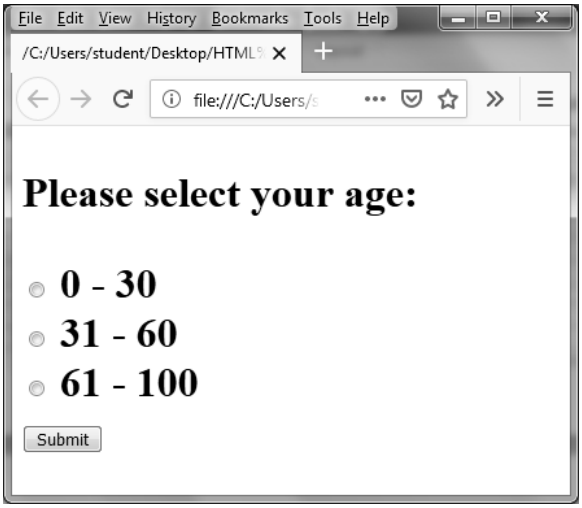

5.1.3

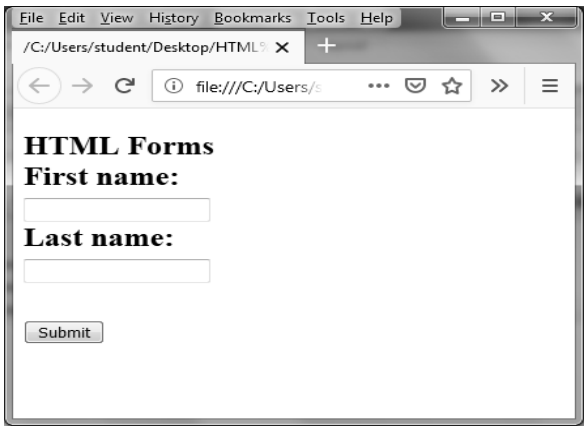

5.1.4

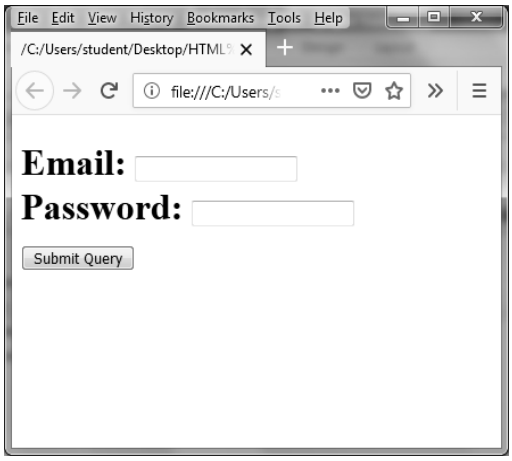

(4 × 4) (16)

5.2 Describe why it is necessary to use the code <!DOCTYPE html> in a website. (2)

5.3 Name THREE disadvantages of using frames on a website. (3)

5.4 Explain TWO types of image compression that can be used for optimising images for the web. (2 × 2) (4)

[25]

QUESTION 6

6.1 List any FIVE important guidelines recommended for securing a new web server. (5 × 2) (10)

6.2 Discuss *controlled detour* attacks on websites. (5)

6.3 From a security perspective, discuss THREE disadvantages of an open-source operating system. (3)

6.4 Recommend THREE instances in which you would make use of digital certificates. (3)

6.5 Define a *brute force* attack. (4)

[25]

TOTAL SECTION B: 125
GRAND TOTAL: 150

Copyright reserved