higher education & training

Department:
Higher Education and Training
REPUBLIC OF SOUTH AFRICA

NATIONAL CERTIFICATE (VOCATIONAL)

MECHANICAL DRAUGHTING AND TECHNOLOGY
NQF LEVEL 4
(First paper)

(12050694)

21 November 2023 (X-paper)
09:00–12:00

REQUIREMENTS: TWO A2, A3 or A4 drawing sheets

Calculators and CAD software may be used.

This question paper consists of 5 pages.

Copyright reserved

DEPARTMENT OF HIGHER EDUCATION AND TRAINING
REPUBLIC OF SOUTH AFRICA

NATIONAL CERTIFICATE (VOCATIONAL)
MECHANICAL DRAUGHTING AND TECHNOLOGY
PAPER 1
NQF LEVEL 4
TIME: 3 HOURS
MARKS: 75

INSTRUCTIONS AND INFORMATION

1. Answer all the questions.
2. Read all the questions carefully.
3. Number the answers according to the numbering system used in this question paper.
4. Make all drawings in pencil.
5. Use only a black or blue pen.
6. Write neatly and legibly.

Copyright reserved

QUESTION 1: PRINCIPLES OF DESIGN

1.1 Explain FOUR basic stages in a design action framework that should be adopted right from the start of the design process. (4 × 2) (8)

1.2 Name TWO steps in the design process. (2)

[10]

QUESTION 2: SCREW THREADS AND SPRINGS

2.1 Write down the equation or formula used to determine the lead. (2)

2.2 Explain the difference between *lead* and *pitch*. (2)

2.3 Name FOUR ways in which helical springs can be represented on a drawing. (4)

2.4 List THREE types of screw threads used in the engineering industry. (3)

2.5 A helical spring made of 26 mm square material has an outside diameter of 170 mm and a lead of 75 mm.

Calculate the length of the spring for TWO full right-hand turns (coils). (4)

[15]

QUESTION 3: GEARS AND KEYS

An involute spur gear has the following details:

Pitch-circle diameter = 180 mm
Number of teeth = 18

Calculate each of the following parameters for a gear:

3.1 Circular pitch

3.2 Diametral pitch

3.3 Circular tooth thickness

3.4 Addendum

3.5 Dedendum

(5 × 3) **[15]**

Copyright reserved

QUESTION 4: CAMS

4.1 Name each of the following cam followers:

4.1.1

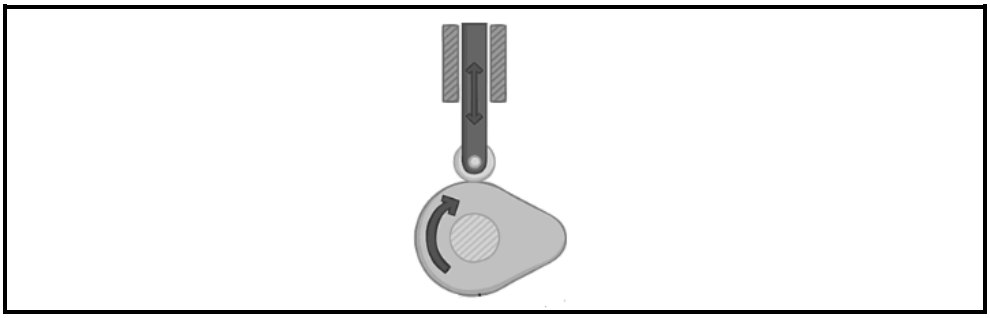

4.1.2

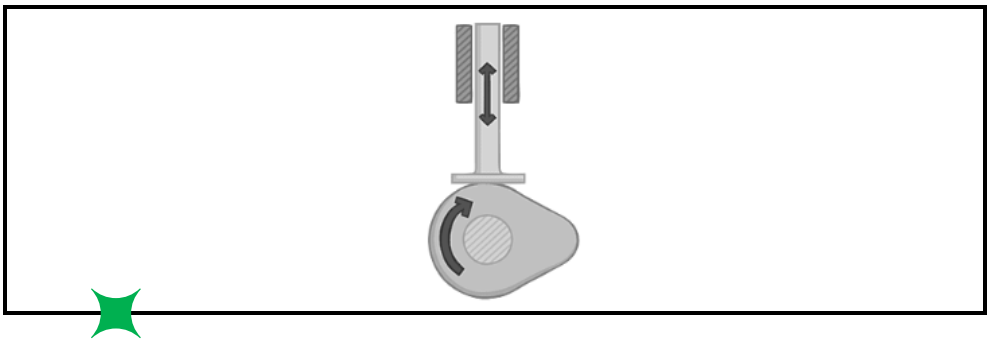

4.1.3

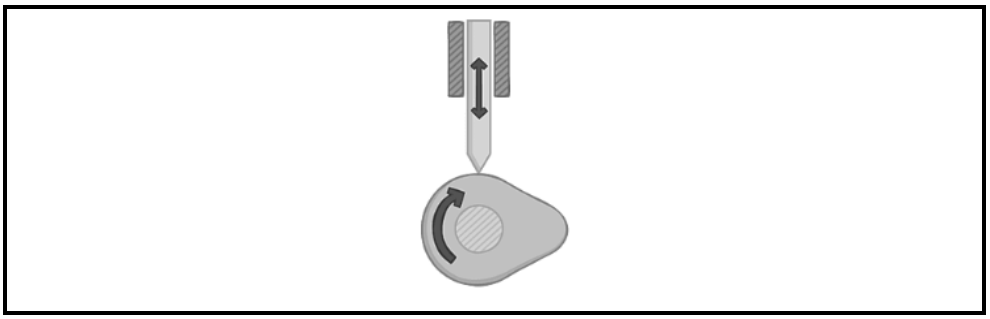

(3 × 1) (3)

4.2 Make a freehand drawing of a uniform acceleration and retardation motion displacement diagram. In this diagram, lift takes place from 0° to 180°; dwell takes place from 180° to 270°; and the fall takes place from 270° to 360°. (6)

4.3 List THREE details that are required when constructing a displacement diagram. (3)

4.4 Define the term *performance* as it appears on a displacement diagram of a cam. (2)

4.5 Which type of cam motion is characterised by dwell periods in between every rise and return motion? (1)

[15]

QUESTION 5: ASSEMBLY AND DETAIL DRAWING

5.1 Explain the purpose of sectioning in engineering drawing. (3)

5.2 Give TWO important requirements that are indicated on a detail drawing of a component. (2)

5.3 Name the type of sectioning that can be used when a feature is in a small area. (1)

5.4 Name TWO important dimensioning lines applicable to detail drawing. (2)

5.5 Explain the word *orthographic*. (2)

5.6 Why is a parts list placed on an assembly drawing? (2)

5.7 What is the function of placing a projection system symbol on a drawing? (2)

5.8

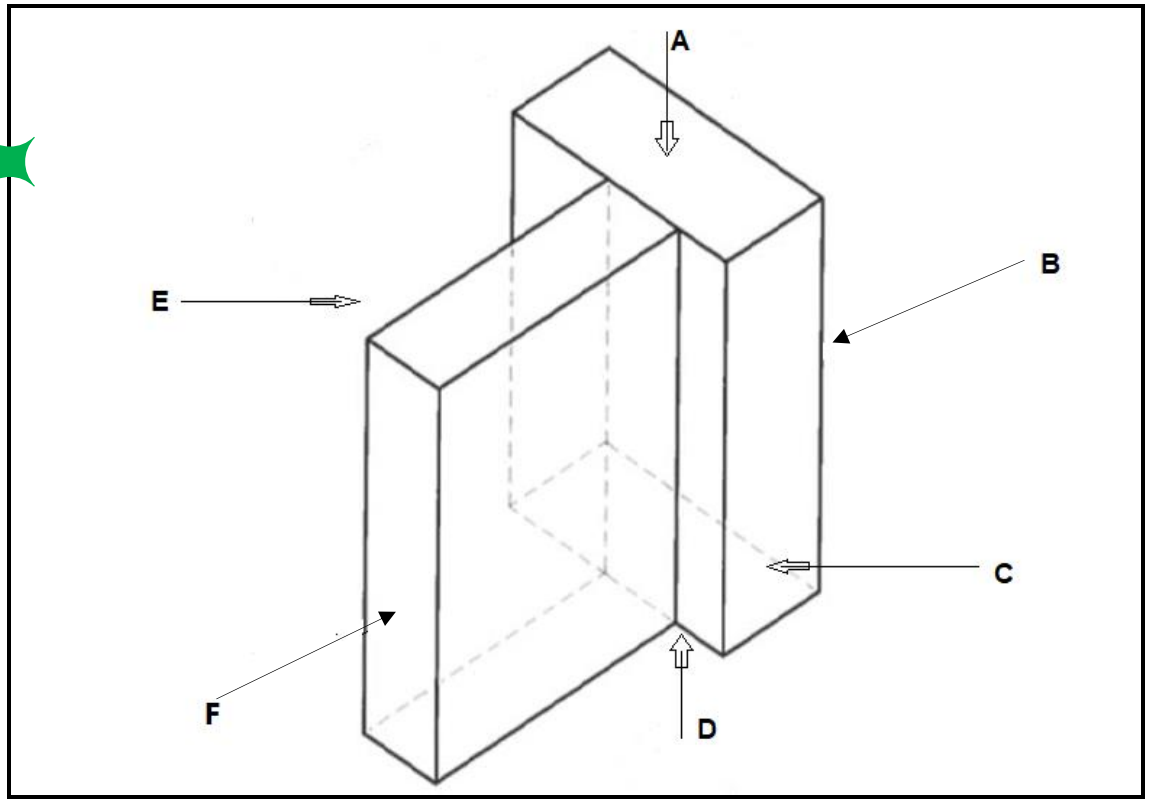

Name the views shown in the figure by writing only the answer next to the letter (A–F) in the ANSWER BOOK. (6 × 1) (6)

[20]

TOTAL: 75

Copyright reserved