higher education & training

Department:
Higher Education and Training
REPUBLIC OF SOUTH AFRICA

NATIONAL CERTIFICATE (VOCATIONAL)

ELECTROTECHNOLOGY
NQF LEVEL 4

(12040594)

21 November 2023 (X-paper)
09:00–12:00

This question paper consists of 8 pages.

207Q1N2321

Copyright reserved

DEPARTMENT OF HIGHER EDUCATION AND TRAINING
REPUBLIC OF SOUTH AFRICA

NATIONAL CERTIFICATE (VOCATIONAL)
ELECTROTECHNOLOGY
NQF LEVEL 4
TIME: 3 HOURS
MARKS: 100

INSTRUCTIONS AND INFORMATION

1. Answer all the questions.
2. Read all the questions carefully.
3. Number the answers according to the numbering system used in this question paper.
4. Use only a black or blue pen.
5. Write neatly and legibly.

Copyright reserved

QUESTION 1

1.1 Indicate whether the following statements are TRUE or FALSE by writing only 'True' or 'False' next to the question number (1.1.1–1.1.5) in the ANSWER BOOK.

1.1.1 Stirrers, mixers, crushers, and mills are used for altering the shapes of materials into definite shapes.

1.1.2 The information on the nameplate of a motor can help us to determine the most suitable application for that motor.

1.1.3 The force that produces rotation can be defined as torque.

1.1.4 Ingress protection is the protection of electrical and mechanical equipment against environmental ingress.

1.1.5 When releasing or resetting an emergency stop it must initiate a restart.

(5 × 1) (5)

1.2 List FIVE disadvantages of three-phase synchronous motors. (5)

1.3 A 380 V, three-phase synchronous motor operating at a power factor of 0,9 draws 15 A from the supply. If the total losses of the motor amounts to 1 460 W, calculate the efficiency of the motor. (5)

1.4 Refer to FIGURE 1 below and answer the questions.

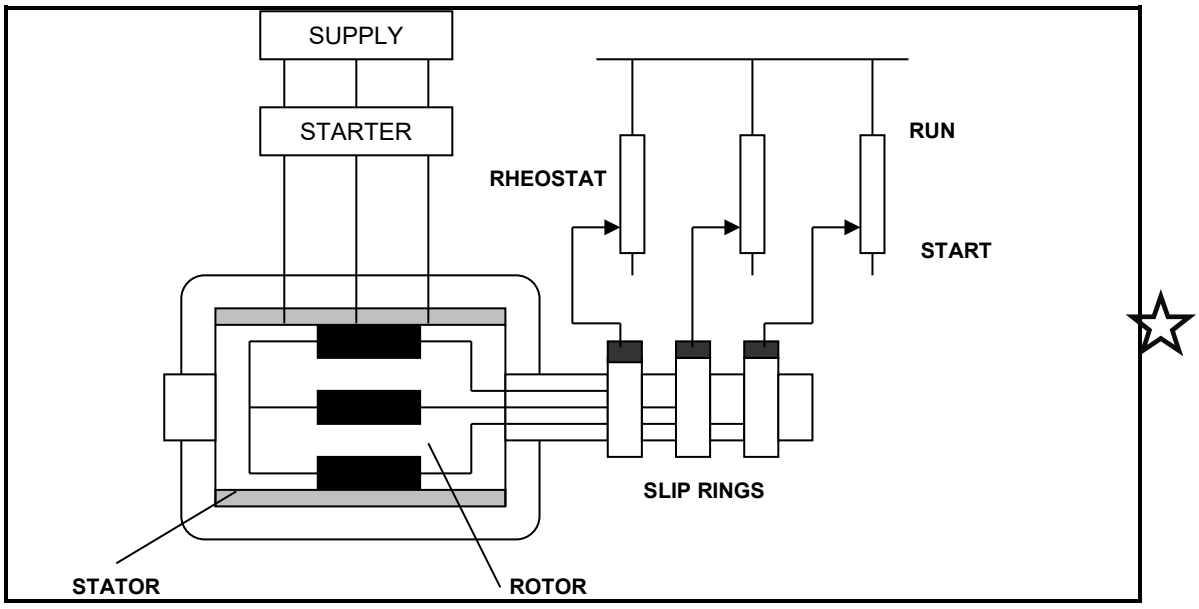

FIGURE 1

1.4.1 Identify the type of motor in FIGURE 1 above. (1)

1.4.2 Explain the operation of this motor. (4)

[20]

QUESTION 2

2.1 FIGURE 2 below shows the control circuit of two pumps that are manually started. ☆

Your supervisor has asked you to design a new control circuit to achieve the following objectives:

- Pump 1 must be started manually.
- Pump 2 must start automatically 5 seconds after pump 1 has started.
- If any of the overloads trip, then both pumps must switch off.

NOTE: The pumps are both connected to 3-phase motors.

Draw the new control circuit as well as the main/power circuit in the ANSWER BOOK. (15)

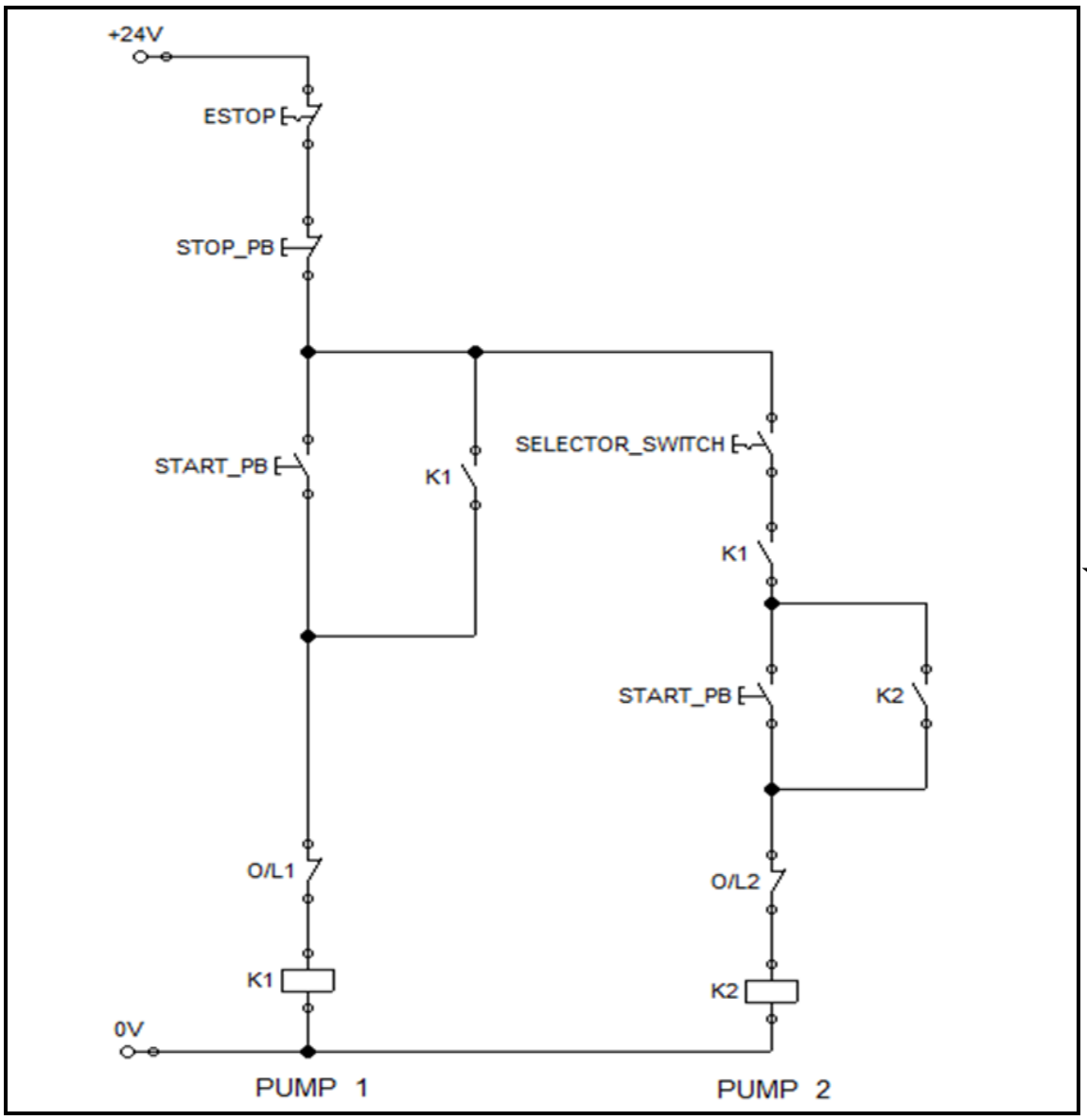

☆

FIGURE 2

2.2 Draw the IEC symbols for the following electrical elements:

2.2.1 Connectors ☆

2.2.2 Selector switch

2.2.3 Limit switch

2.2.4 Ultrasonic proximity sensor

2.2.5 Delay on relay, contactor

(5 × 1) (5)
[20]

QUESTION 3

3.1 You are tasked to install a VSD for the pump in QUESTION 2.1.

List FIVE electrical components needed for this circuit. ☆ (5)

3.2 Choose description from COLUMN B that matches the type of drive control in COLUMN A. Write only the letter (A–E) next to the question number (3.2.1–3.2.4) in the ANSWER BOOK.

COLUMN A		COLUMN B	
3.2.1	Hydraulic speed control	A	speed control is achieved by manually controlling the conical pulley or positioning the motor
3.2.2	DC drive control	B	using the turbine principle, by changing the volume of oil in the coupling, this changes the speed between drive and driven couplings
3.2.3	AC drive control ☆	C	the converter changes supply voltage that is fed to the motor and the commutator changes the direct current to alternating current
3.2.4	Mechanical variable speed control	D	no mechanical inverters are required and the speed of the motor is regulated by the frequency, this changes the frequency of the motor voltage ☆
		E	a system that automatically controls the speed of an electric motor

(4 × 1) (4)

3.3 The purpose of a motor is to develop sufficient torque to drive a load.

Name FIVE types of torque. ☆ (5)

3.4 Give a brief explanation of the following types of diagrams regarding electrical drawings.

3.4.1 Block diagram

3.4.2 Circuit diagram

3.4.3 Equivalent circuit diagram

(3 × 2) (6)
[20]

QUESTION 4

4.1 There are advantages of using a PLC in control applications.

List THREE advantages. ☆ (3)

4.2 Study the circuit in FIGURE 3 below and then write the equivalent PLC programmes of the following:

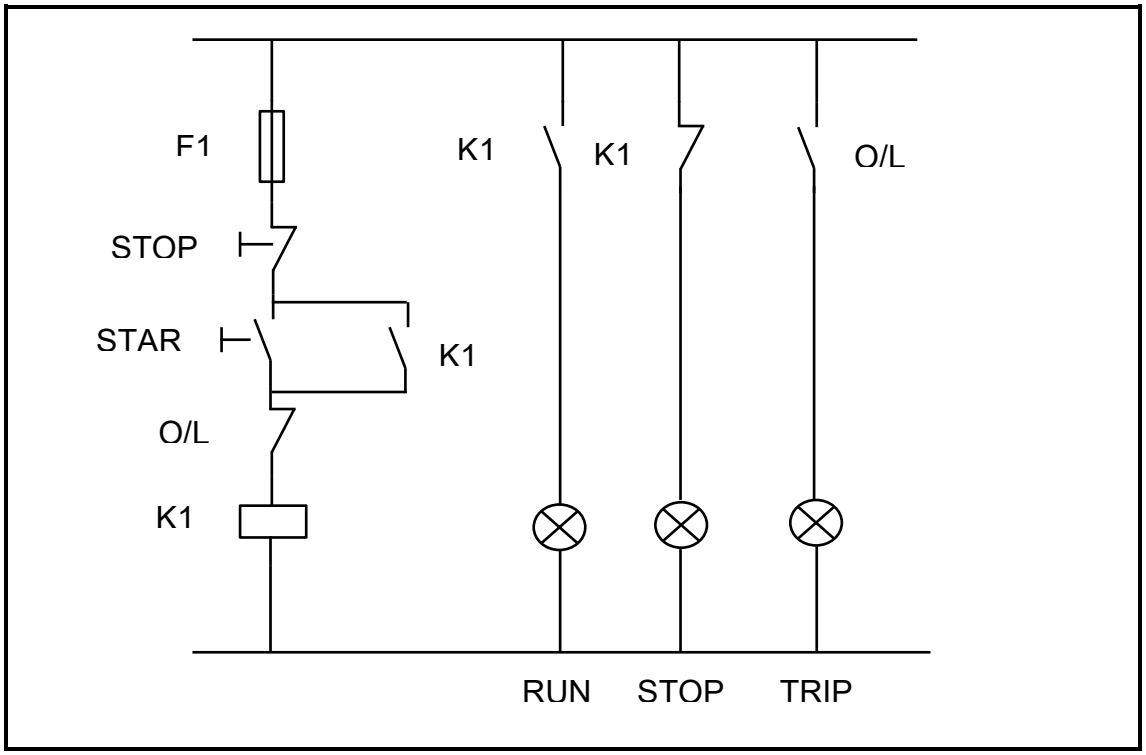

☆

FIGURE 3

4.2.1 Ladder diagram (LD) ☆ (5)

4.2.2 Instruction list (IL) (4)

4.2.3 Function block (FB) ☆ (4)

4.3 Complete the following sentences by writing the applicable PLC programming term(s) next to the question number (4.3.1–4.3.4) in the ANSWER BOOK.

4.3.1 A coil is a ladder diagram symbol that represents an … instruction.

4.3.2 The … is a discrete interface that does not require an external power source and is triggered by the change in state of n/o or n/c contact.

4.3.3 An … is when any input logic operator is a logic 1, the logic output will be 1.

4.3.4 The program scan is the … required by the processor to evaluate and execute the control logic.

☆ (4 × 1) (4)

[20]

QUESTION 5

5.1 Refer to the circuit shown in FIGURE 4 below and write down a safety procedure to follow if required to replace the faulty contactor (K1).

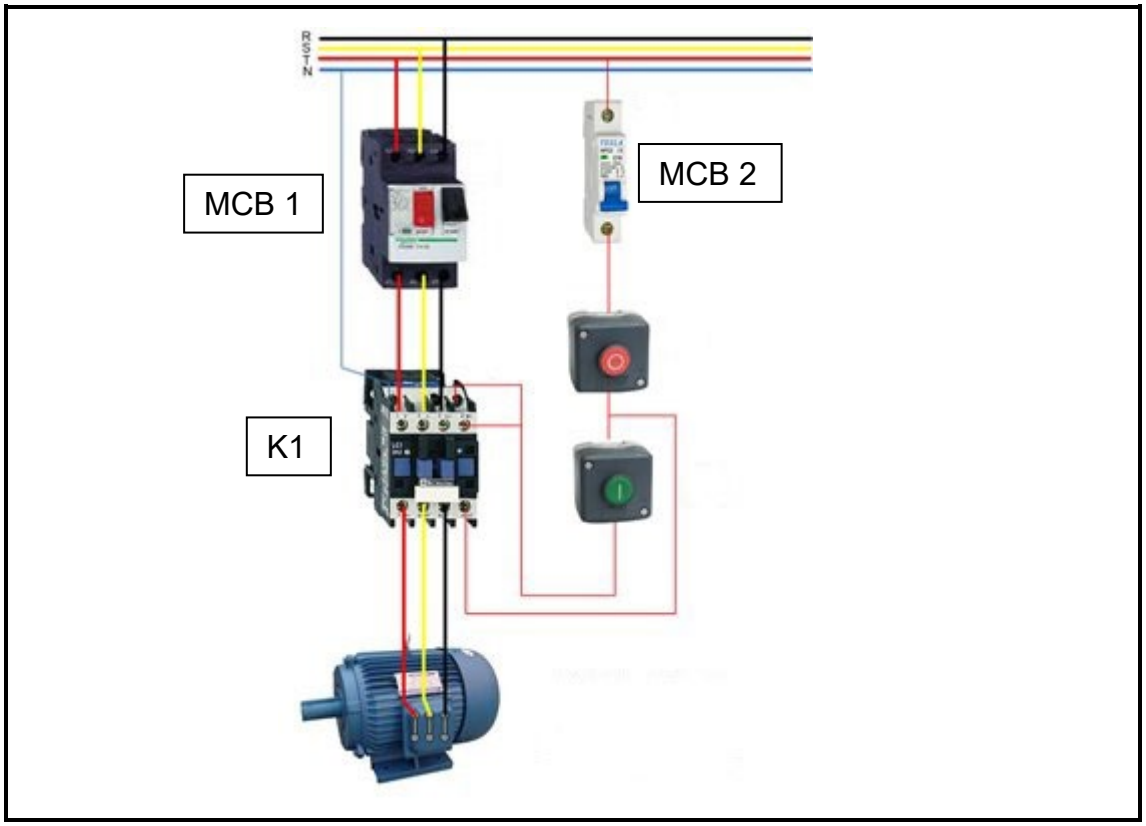

☆

FIGURE 4 (6)

5.2 Give a brief explanation of each of the following terms:

5.2.1 Electromagnetic interference (EMI) ☆

5.2.2 Faraday cage

(2 × 2) (4)

5.3 The installation of power-driven systems includes cabinets, auxiliary boxes cabling and motors. To prevent disturbance through the air, all installations should form a Faraday cage for protection against radiated emissions.

List FIVE ways to reduce radiated emissions when installing cabling and wiring. (5)

5.4 Quality standards used on mechatronic systems or motor control applications are determined by various factors.

Name FIVE factors. (5)

[20]

☆

TOTAL: 100

Copyright reserved