higher education & training

Department:
Higher Education and Training
REPUBLIC OF SOUTH AFRICA

MARKING GUIDELINE

NATIONAL CERTIFICATE (VOCATIONAL)

ELECTROTECHNOLOGY
NQF LEVEL 4

21 November 2023

This marking guideline consists of 7 pages.

Copyright reserved

QUESTION 1

1.1 1.1.1 False
1.1.2 True
1.1.3 True
1.1.4 True
1.1.5 False

(5 × 1) (5)

1.2
- Synchronous motors cannot be used for variable speed jobs as the speed cannot be adjusted.
- A synchronous motor requires an external source for supplying DC excitation.
- It cannot be started under load as the starting torque is zero.
- A synchronous motor has a tendency to hunt.
- It may fall out of synchronism and stop when overloaded.
- A synchronous motor requires collector rings and brushes.
- These motors are not suitable for some applications. (Any 5 × 1) (5)

1.3
$$P_{in} = \sqrt{3}\, V_L I_L \cos\theta$$
$$P_{in} = \sqrt{3} \times 380 \times 15 \times 0{,}9 \checkmark$$
$$P_{in} = 8\,885{,}421\ W \checkmark$$

$$P_{out} = P_{in} - Total\ losses$$
$$P_{out} = 8\,885{,}421 - 1\,460 \checkmark$$
$$P_{out} = 7\,425{,}421\ W \checkmark$$

$$\eta = \frac{P_{out}}{P_{in}} \times 100$$

$$\eta = \frac{7\,425{,}421}{8\,885{,}421} \times 100$$

$$\eta = 83{,}569\ \% \checkmark$$ (5)

1.4 1.4.1 Wound-rotor induction motor (1)

1.4.2 The wound-rotor motor starts with a high resistance.✓ As the motor gains speed, the variable torque increases✓ as the resistance is reduced.✓ The rotor slip rings are short-circuited at the running speed.✓ (4)

[20]

Copyright reserved

QUESTION 2

2.1

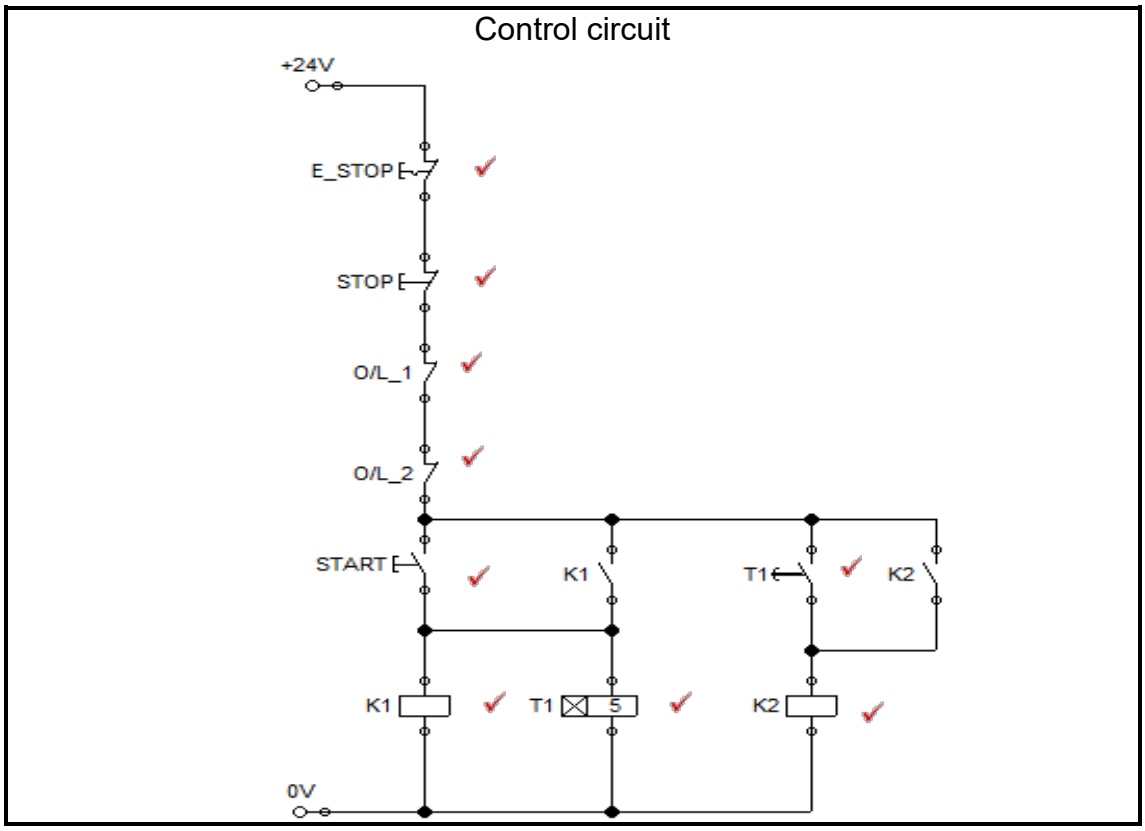

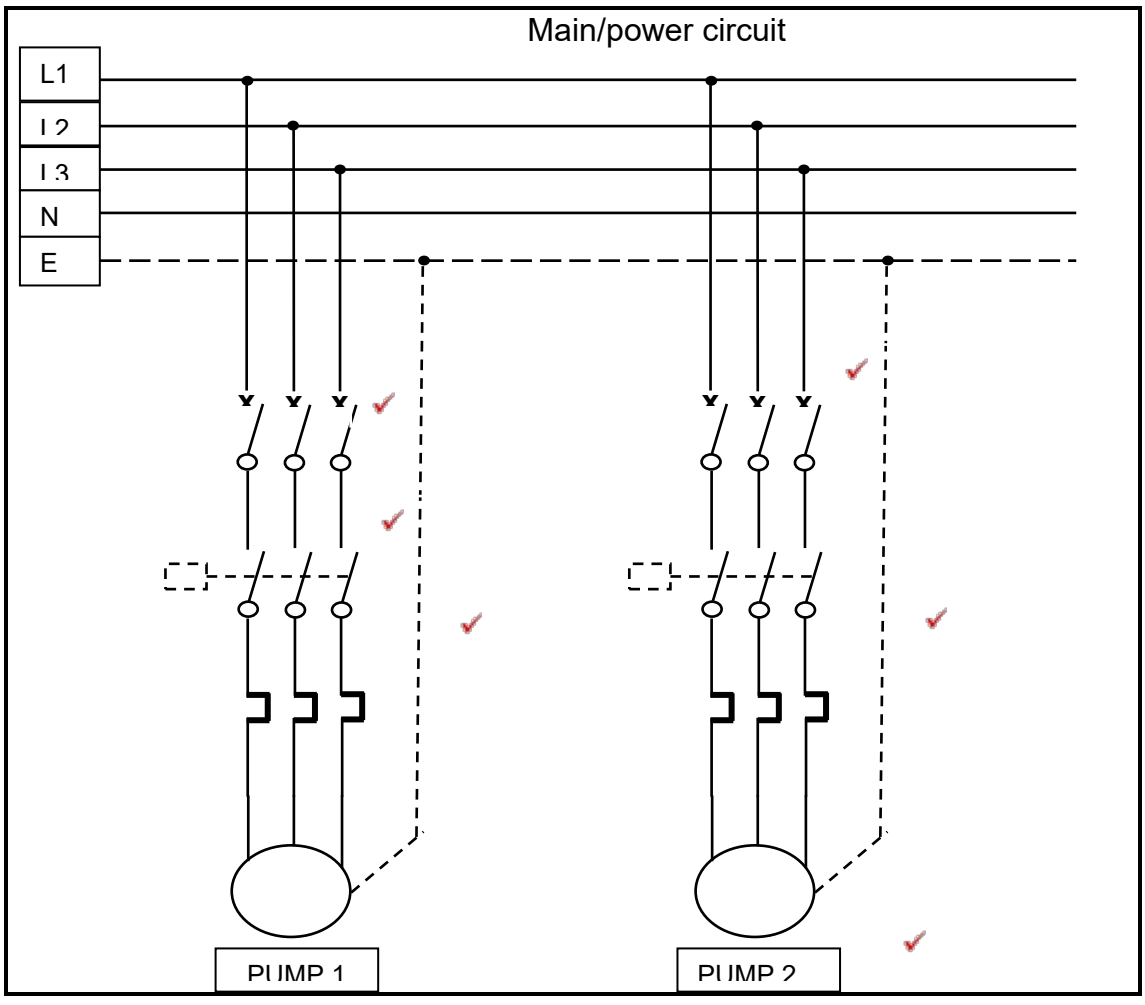

(15)

2.2 2.2.1 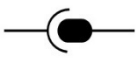

2.2.2 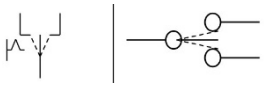

2.2.3 

2.2.4 

2.2.5 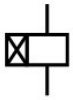

(5 × 1) (5)
[20]

QUESTION 3

3.1
- Emergency stop button
- Stop button
- Start button
- Overload relays
- Delay-on timer
- Contactors
- 3-phase motors

(Any 5 × 1) (5)

3.2 3.2.1 B
3.2.2 C
3.2.3 D
3.2.4 A

(4 × 1) (4)

3.3
- Breakaway torque
- Accelerating torque
- Running torque
- Peak torque
- Holding torque (5)

3.4 3.4.1 A simplified representation of a circuit with its main parts.✓ It shows how the different installations work and the flow of the circuit.✓

3.4.2 This is a detailed representation of the circuit✓ with all the individual components.✓

3.4.3 This is a special version of an explanatory circuit diagram for the analysis and calculation✓ of the circuit characteristics.✓

(3 × 2) (6)
[20]

QUESTION 4

4.1
- They are smaller in size than hardwired solution.
- It is easier and faster to make changes.
- They have integrated diagnostics and override functions.
- Diagnostics are centrally available.
- Applications can be immediately documented.
- Applications can be duplicated faster and more cheaply.

(Any 3 × 1) (3)

4.2 4.2.1

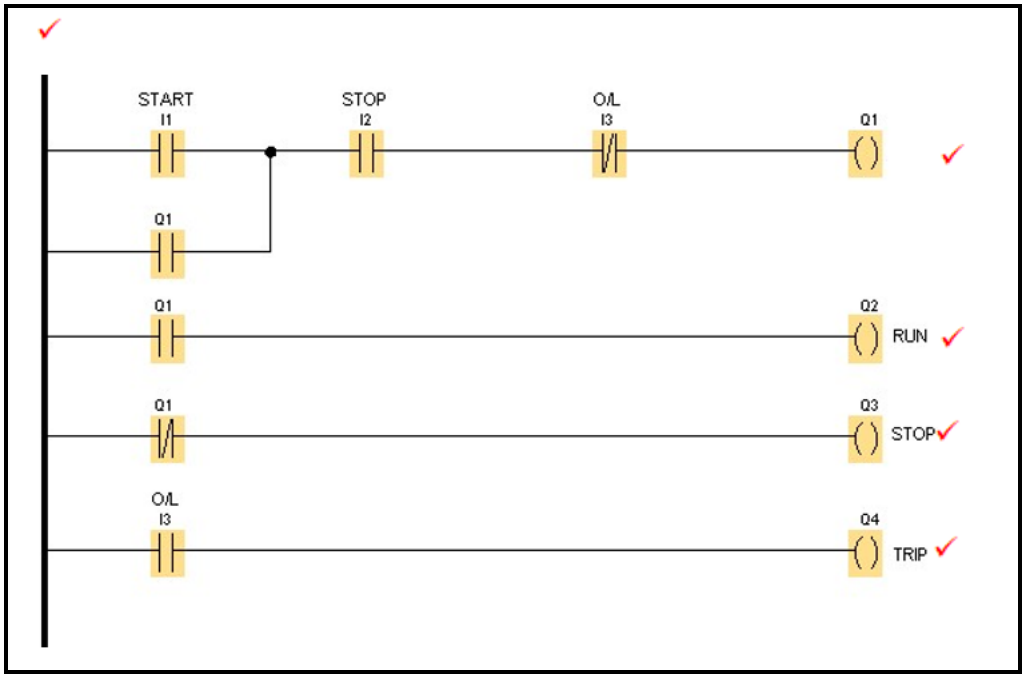

(5)

4.2.2

Line no	Operand	Operator
000	LD	I 1
001	OR	Q 1
002	ANDN	I 2
003	ANDN	1 3
004	=/SET	Q 1
005	LD	Q 1
006	=/SET	Q 2
	LDN	Q 1
	=/SET	Q 3
	LD	I 3
	=/SET	Q 4

(4)

4.2.3

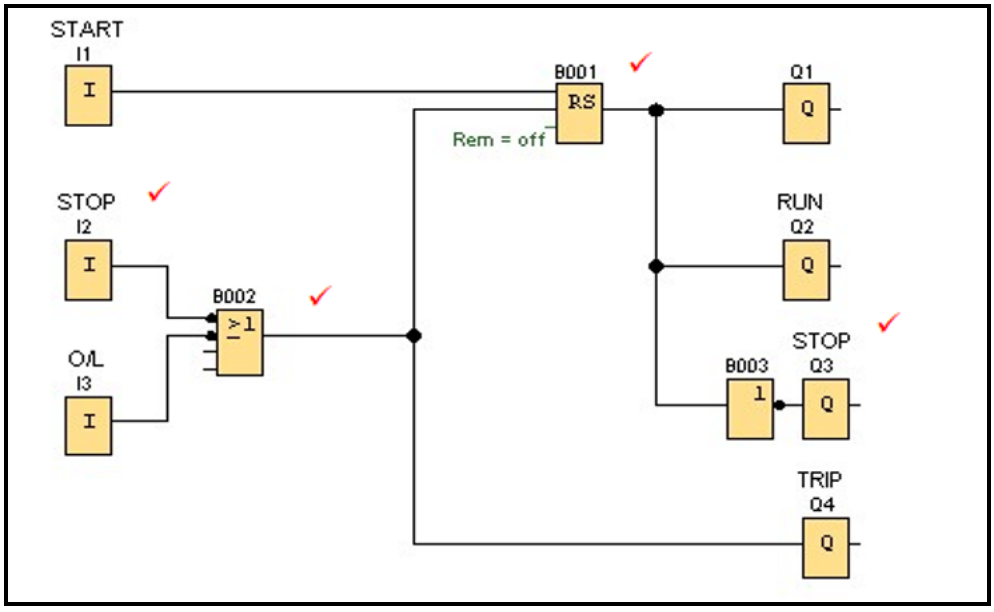

(4)

4.3 4.3.1 Output
4.3.2 Contact output interface
4.3.3 OR Gate
4.3.4 Time

(4 × 1) (4)
[20]

QUESTION 5

5.1
- Isolate Both the MCB 1 MCB 2
- Disconnect the wires on K1
- Replace the contactor with new one
- Make sure the coil voltage is the same as the faulty one
- Switch on both MCB1 and MCB2
- Test to see if circuit is functioning properly (6)

5.2 5.2.1 Electromagnetic disturbance that manifests in performance degradation,✓ malfunction or failure of electronic equipment.✓

5.2.2 An enclosure formed by conducting material✓ that blocks the external static electric fields.✓

(2 × 2) (4)

5.3
- Use special HF cable entries for high-frequency earthing of power cable shields.
- Use conductive gaskets for HF earthing of control cable shield.
- Use shielded power and control cables.
- Allow no breaks in the cable shields.
- Select low impedance shield connections on the MHz range.
- Route power and control cables separately.
- Use twisted pairs to avoid disturbances.
- Use ferrite rings for disturbances, if necessary.
- Select and route internal wires correctly. (Any 5 × 1) (5)

5.4
- Production monitoring
- Maintenance staff
- Maintenance standards
- Product quality and maintenance
- Sequence testing (5)

[20]

TOTAL: 100

Copyright reserved