higher education & training

Department:
Higher Education and Training
REPUBLIC OF SOUTH AFRICA

MARKING GUIDELINE

NATIONAL CERTIFICATE (VOCATIONAL)

ELECTRONIC CONTROL AND DIGITAL ELECTRONICS
NQF LEVEL 4

16 November 2023

This marking guideline consists of 9 pages.

Copyright reserved

QUESTION 1

1.1
- Tuned amplifiers
- Radio antenna couplings
- Radio receivers
- Impedance matching
- Oscillators
- Filters

(Any 4 × 1) (4)

1.2

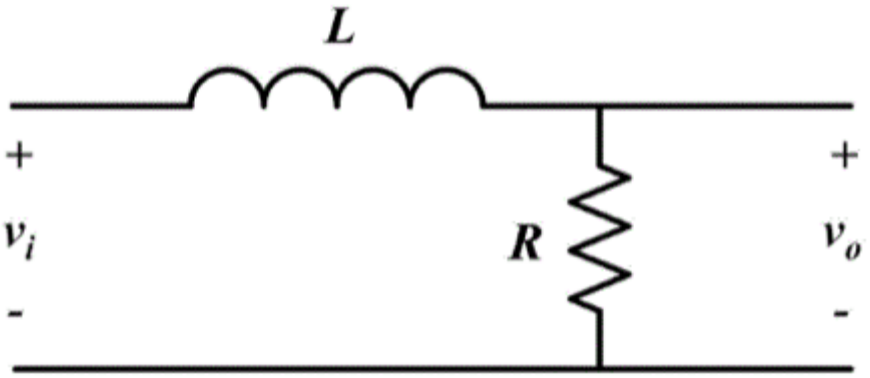

Low-Pass RL Circuit

Each component = 1 mark
Input voltage and output voltage = ½

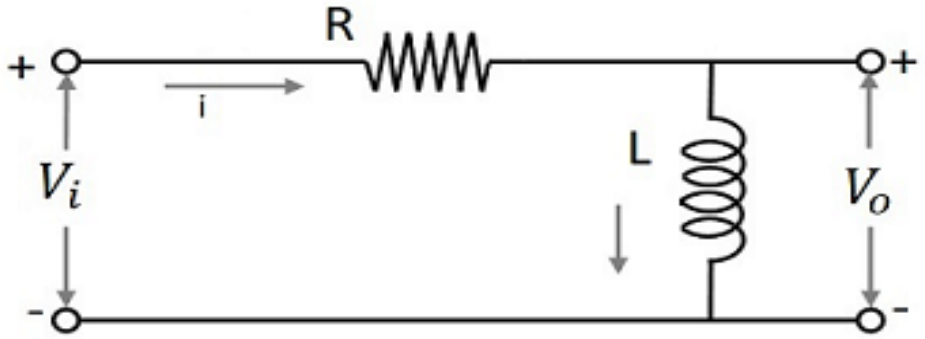

High-Pass RL Circuit

Each component = 1 mark
Input voltage and output voltage = ½

(3 + 3) (6)

1.3 1.3.1 $\tan \emptyset = {}^{Xl - Xc}/_{R}$ ✓

$\tan -26{,}56 = {}^{Xl - 60}/_{40}$ ✓

$40 \times -0{,}499 = Xl - 60$

$Xl = 40{,}04\ \Omega$ ✓

NOTE:
ONE mark for the correct formulae
ONE mark for the correct substitution
ONE mark for the correct answer (3)

1.3.2 $Xl = 2\pi FL$

$40{,}04 = 2\pi \times 50 \times L$✓

$40{,}04 = 314{,}159 \times L$

$L = \dfrac{40{,}04}{314{,}159}$

$L = 0{,}127\ H$

$L = 127{,}45\ mH$✓✓

NOTE:
ONE mark for the correct substitution
TWO marks if the answer is converted to mH, if the answer is not converted give ONE mark. (3)

1.3.3

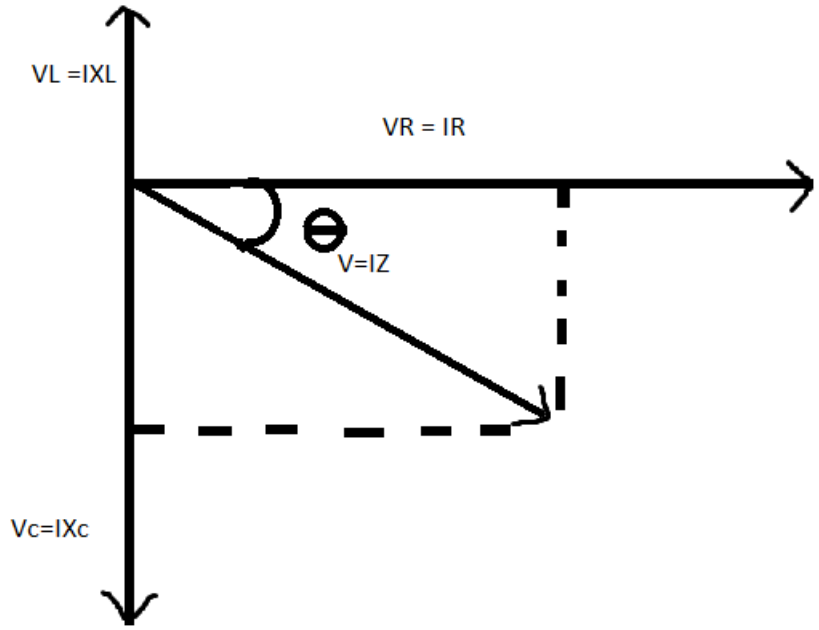

NOTE:
ONE mark for the correct angle
ONE mark for current vector and 1 for capacitor
ONE mark for the impedance vector (4)
[20]

QUESTION 2

2.1
- Circuit components
- Supply voltage
- Output load
- Operating point of active device
- Stray capacitance
- Temperature variations
- Mechanical vibrations (Any 5 × 1) (5)

2.2

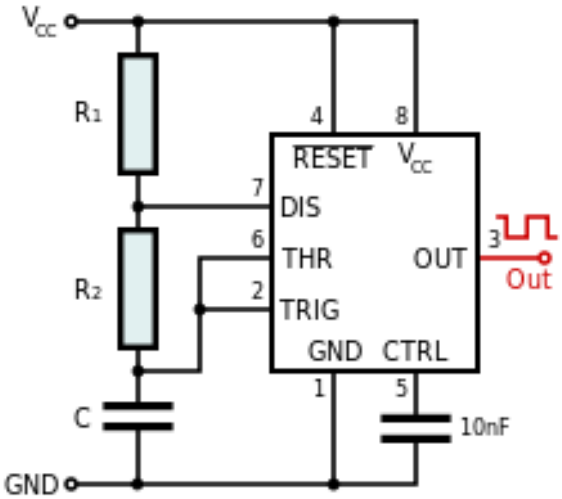

Each component including the IC = ONE mark
Vcc and GND = ½ (6)

2.3
- The AC power supply is rectified and then filtered to obtain an unregulated DC input voltage.
- The high-frequency circuitry then switches the resulting DC voltage on and off.
- By so doing, DC is converted to AC.
- The inverted AC is used to drive the primary winding of a high-frequency transformer.
- This converts the voltage up or down to the required output level on its secondary winding.
- After the transformer secondary, the high-frequency AC is rectified to produce the DC output voltage.
- Regulation of the output to provide a stabilised DC supply is carried out by the control or feedback circuit.
- Most systems operate on a fixed frequency pulse.
- This compensates for changes in the input supply and output load.
- The output load is compared to an accurate reference supply providing a very stable DC output. (Any 8 × 1) (8)

Copyright reserved

2.4
- Forward breakover voltage – is the voltage at which the SCR is switched from its position to the on position.
- Reverse breakdown voltage – is the value of the reverse voltage from the cathode to the anode at which the device breaks into the avalanche region and starts conducting heavily.
- Holding current – is the value of the anode current below which the SCR switches from the on position to the off position under the given conditions.
- Gate current – is the value of anode current necessary to switch the SCR from the off position to the on position under specified conditions.
- Average forward current – is the maximum continuous value of the anode that the SCR can handle in the on position under specified conditions.

NOTE: ONE mark for listing the parameter and another mark for explanation
(Any 3 × 2) (6)

2.5
- No signal power is lost in the collector or base resistor because of the low winding resistance of the transformer.
- It provides a higher voltage gain than the RC-coupled amplifier.
- It provides excellent impedance matching between stages. (3)

2.6
- TV
- Mobile telephones
- Wi-Fi
- Computers
- Camcorders
- Stereos (Any 2 × 1) (2)

[30]

QUESTION 3

3.1
- Maximum collector-base voltage – the replacement transistor should have a V_{cbo} rating equal to or higher than the original transistor.
- Maximum collector-emitter voltage – the replacement transistor should have a V_{ceo} rating equal to or higher than the original transistor.
- Maximum emitter-base voltage – the replacement transistor should have a Veb0 rating equal to or higher than the original transistor.
- Maximum collector current – the replacement transistor should be able to handle as much or more collector current as the original transistor.
- Power dissipation – the replacement transistor should be able to dissipate as much or more power as the original transistor.
- Gain – the replacement transistor should gain equal to or better than the original transistor and it should be as close to the original specification as possible.
- Gain bandwidth – the replacement part should have a transition frequency equal to or faster than the original transistor and should be as close as possible to the original specification.

NOTE: ONE mark for listing the parameter and another mark for explanation.
(Any 4 × 2) (8)

Copyright reserved

3.2 3.2.1 False
3.2.2 False
3.2.3 True
3.2.4 True
3.2.5 True

(5 × 1) (5)

3.3
- The strips of copper tracks can loosen after components have been changed several times.
- When a copper track breaks it may leave an invisible hairline of copper. This results in an intermittent connection on the track, possibly causing a short circuit.
- The relationship between components and circuit diagrams may be confusing for beginners since the connecting tracks and where they are broken cannot be seen from the component side. This means that you have to turn the board over when fault-finding. (3)

3.4
- Forward resistance
- Reverse resistance (2)

3.5 The testing of the operation of electrical equipment ✓ to determine if electrical equipment is safe and working correctly. ✓ (2)

OR

Investigation ✓ of the cause of malfunction ✓ in machinery, especially electronic equipment.

[20]

QUESTION 4

4.1 4.1.1 When we AND or OR two variables, the position or order of the variables makes no difference to the result. For example: A + B = B + A, **OR** AB = BA

4.1.2 When we AND or OR several variables, the grouping of the variables does not affect the result. For example: A+(B+C) = (A+B)+C, **OR** A(BC) = (AB)C

4.1.3 If we AND several variables and OR the result with a single variable, it is equivalent to ANDing the OR of the variable with individual variables. For example: A + BC = (A + B)(A + C).

(3 × 2) (6)

4.2 4.2.1 6_{10} = 1100
4.2.2 28_{10} = 00101110

(2 × 1) (2)

4.3 Encoder is a logic circuit that converts decimal inputs✓ to binary outputs✓ while decoder is a logic circuit that converts from binary✓ to decimal.✓ (4)

4.4
- Check that the software is compatible with the existing hardware.
- Ensure that the software is compatible with the operating system.
- Make a backup of your existing drivers.
- Ensure anti-virus software is in place. (3)

[15]

QUESTION 5

5.1 5.1.1 A solid-state control device that can be programmed to control process or machine operations.

5.1.2 It is a self-maintaining circuit in that after being energised it maintains that state until another input is received.

OR

It keeps the output energised even when the input is off.
(Any ONE)

5.1.3 Refers to the programmed instructions that drive one output; a complete control program may have several rungs.

5.1.4 An electrically operated device that mechanically switches electrical circuits.

5.1.5 It is a microprocessor-based control system that replaces central relays, counters, timers, and sequencers.

OR

Execute and hold the user program. (Any ONE)
(5 × 1) (5)

5.2

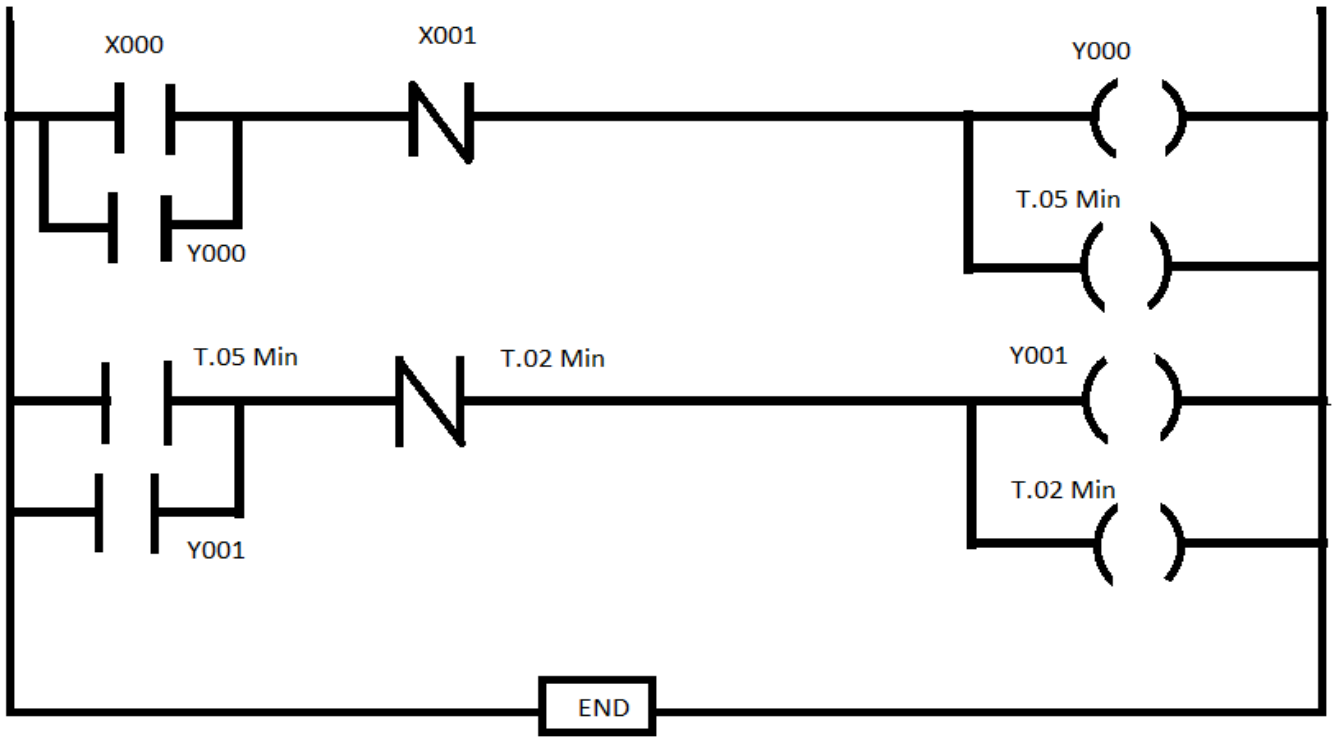

ONE mark for X000
ONE mark for output Y000
ONE mark for Y000 latch circuit
ONE mark for T.05 min output
ONE mark for T.05 NO contact
ONE mark for Y001 latch circuit
ONE mark for T.02 min NC contact
ONE mark for T.02 min output
ONE mark for Y001 output
ONE mark for END

OR

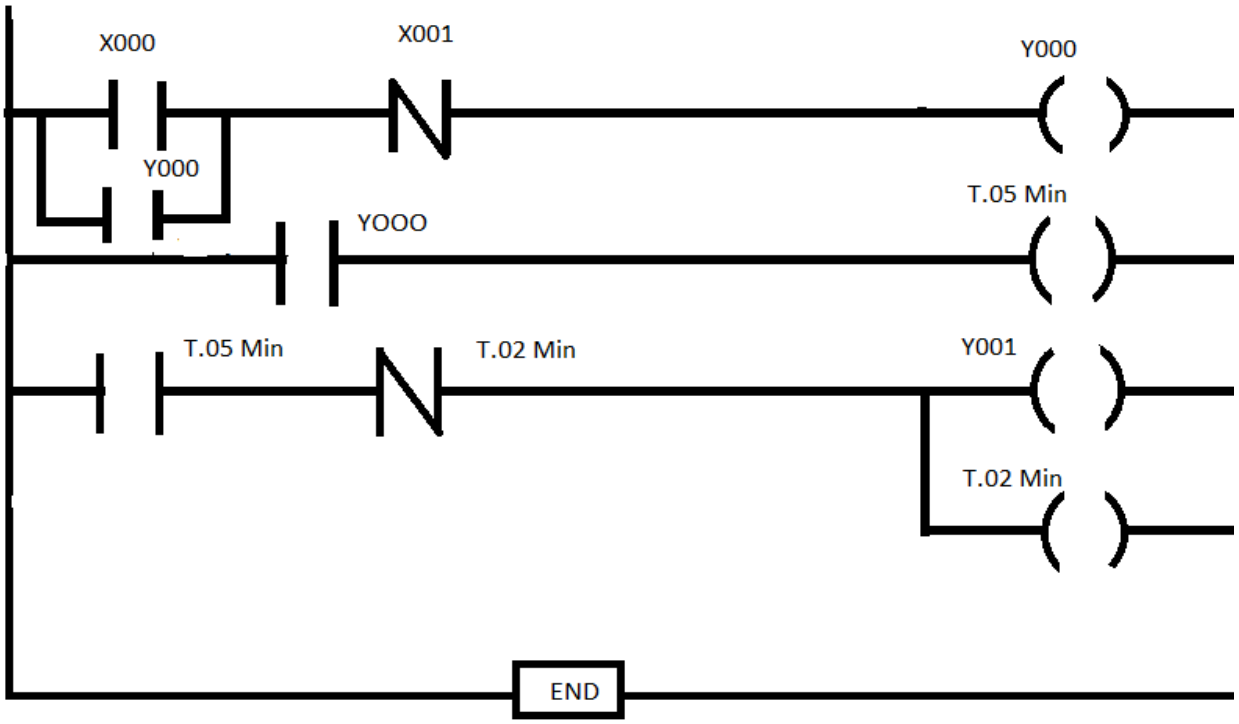

(10)
[15]

TOTAL: 100

Copyright reserved