higher education & training

Department:
Higher Education and Training
REPUBLIC OF SOUTH AFRICA

NATIONAL CERTIFICATE (VOCATIONAL)

ELECTRONIC CONTROL AND DIGITAL ELECTRONICS
NQF LEVEL 4

(12041024)

7 November 2022 (X-paper)
09:00–12:00

This question paper consists of 7 pages and 1 formula sheet.

081Q1N2207

Copyright reserved

TIME: 3 HOURS
MARKS: 100

INSTRUCTIONS AND INFORMATION

1. Answer all the questions.
2. Read all the questions carefully.
3. Number the answers according to the numbering system used in this question paper.
4. Start each question on a new page.
5. Use only a black or blue pen.
6. Write neatly and legibly.

Copyright reserved

QUESTION 1

1.1 A resistor of 12 Ω is connected in series with a capacitor of 100 µF. The voltage supply is 220 V, 50 Hz.

Calculate:

1.1.1 The capacitive reactance

1.1.2 The impedance

1.1.3 The current flowing through the circuit

1.1.4 The phase angle

1.1.5 The voltage across the resistor

1.1.6 The voltage across the capacitor

(6 × 3) (18)

1.2 Indicate whether the following statements are TRUE or FALSE by writing only 'True' or 'False' next to the question number (1.2.1–1.2.2) in the ANSWER BOOK.

1.2.1 In an RLC circuit resonance occurs when $X_L = X_C$.

1.2.2 When the frequency in a band-pass filter increases, the impedance of the circuit decreases.

(2 × 1) (2)

[20]

QUESTION 2

2.1 Various options are given as possible answers to the following questions. Choose the answer and write only the letter (A–D) next to the question number (2.1.1–2.1.4) in the ANSWER BOOK.

2.1.1 An … is a device that produces an output signal with a waveform similar to that of the input signal.

A amplifier
B amplitude
C oscillator
D oscillation

2.1.2 An … is a device that produces an output signal of any desired frequency without any input signal.

A amplifier
B amplitude
C oscillator
D oscillation

2.1.3 … ensures that the correct bandwidth is maintained throughout all stages of amplification.

A Number of stages
B An AC isolator
C Coupling capacitors
D Correct frequency response

2.1.4 … ensures that as much signal as possible is transferred from the output of one stage to the input of the next, keeping interstage losses to a minimum.

A A DC isolator
B An AC isolator
C Impedance matching
D Correct frequency response

(4 × 1) (4)

2.2 Name and explain TWO stability requirements for an oscillator. (2 × 2) (4)

2.3 Name the TWO types of sinusoidal oscillation. (2)

2.4 Calculate the oscillation frequency of an LC tank circuit if L = 80 µH and C = 600 pF. (4)

2.5 Give FIVE applications of a stable multivibrator. (5)

2.6 Name THREE factors that affect the stability of a Q point. (3)

2.7 State FOUR characteristic of a class B amplifier. (4)

2.8 Briefly explain how to turn on an SCR. (4)

[30]

Copyright reserved

QUESTION 3

3.1 Briefly explain the common problems experienced when using a stripboard (Veroboard). (5)

3.2 Name SIX things to check after replacing a transistor. (6)

3.3 You are a newly appointed junior electronics technician at PH Engineering. On your first day at work, your supervisor gives you a PC board and ask you to remove and replace some components.

3.3.1 The first component you need to replace is a MOSFET.

State FIVE safety precautions to take when handling MOSFET components. (5)

3.3.2 Briefly explain how to remove the component from the printed circuit board (PCB) in QUESTION 3.3.1. (4)

[20]

QUESTION 4

4.1 Make a neat block diagram to illustrate an encoder. (3)

4.2 Draw a labelled two-stage circuit diagram of a serial-in parallel-out shift register. (4)

4.3 Convert the decimal number 5 to 8421 BCD code. (2)

4.4 Express the following number as a floating-point number:

1324042_{10} (2)

Copyright reserved

4.5

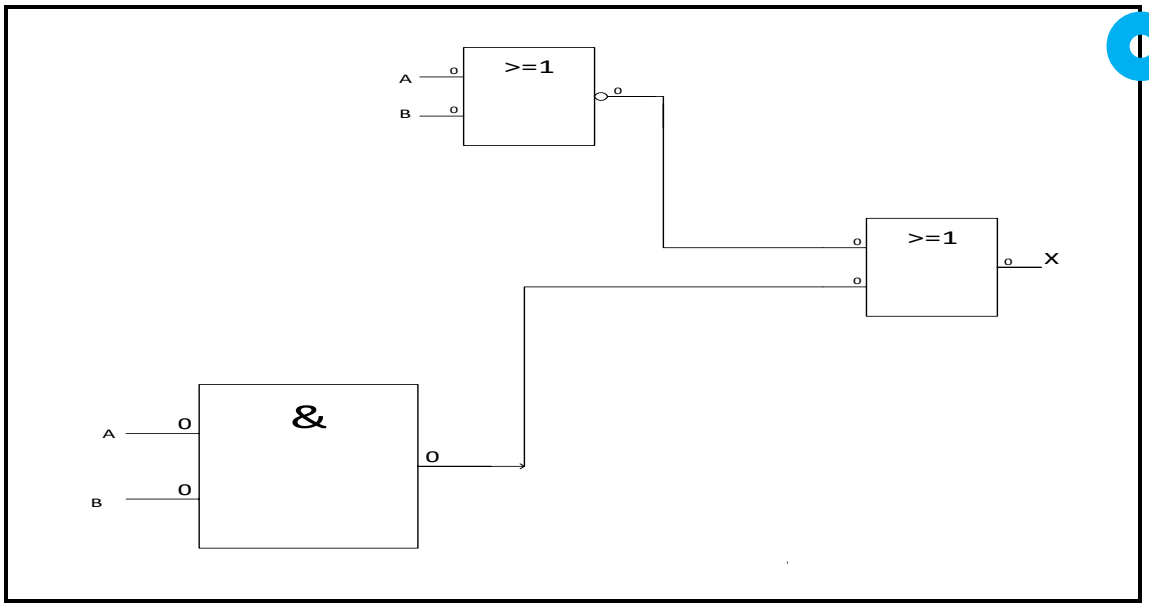

Derive the Boolean expression for the given logic circuit. (2)

4.6 Give TWO problems that one might encounter when dealing with insufficient or outdated computer hardware. (Any relevant answer) (2)

[15]

QUESTION 5

5.1

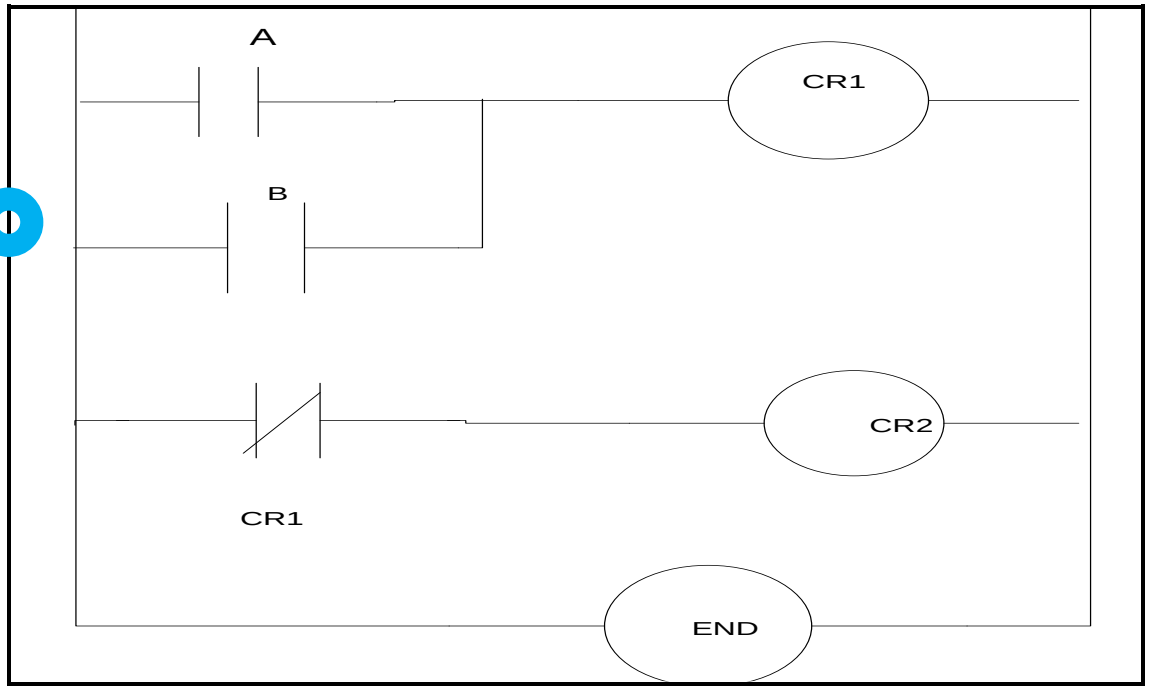

Explain the operation of the given ladder logic diagram. (6)

5.2 Design a PLC circuit that will operate as follows:

When input X is activated, CR1 will be energised. When input X is released, control-relay coil CR1 will be latched by contact CR1. When input Y and input Z are closed simultaneously, CR2 will be energised, which will open the CR2 contact and de-energise CR1. (7)

5.3 Give the schematic symbol for each of the following components in a ladder logic diagram:

5.3.1 Output device

5.3.2 Normally open input contact

(2 × 1) (2)

[15]

TOTAL: 100

Copyright reserved

(12041024)

FORMULA SHEET

AC theory

$$X_C = \frac{1}{2\pi fc}$$

$$X_L = 2\pi fL$$

$$z = \sqrt{R^2 + (X_L - X_C)^2}$$

$$\emptyset = \tan^{-1}\frac{X_L - X_C}{R}$$

$$I_T = \sqrt{{I_R}^2 + (I_C - I_L)^2}$$

$$f_c = \frac{1}{2\pi RC}$$

$$f_r = \frac{1}{2\pi\sqrt{LC}}$$

$$Q = \frac{X_L}{R} = \frac{X_C}{R}$$

$$I = \frac{V}{R}$$

$$f_o = \frac{1}{2\pi RC\sqrt{2n}}$$

$$C_t = \frac{c_1 \times c_2}{c_1 + c_2}$$

$$f_o = \frac{1}{2\pi\sqrt{R_1R_2C_1C_2}}$$

Fundamental of electronics

$$B_W = \frac{f_r}{Q}$$

$$\beta = \frac{I_C}{I_B}$$

$$I_B = \frac{V_{BB} - V_{BE}}{R_B}$$

$$I_C = \frac{V_{CC}}{R_C}$$

Copyright reserved