higher education & training

Department:
Higher Education and Training
REPUBLIC OF SOUTH AFRICA

MARKING GUIDELINE

NATIONAL CERTIFICATE (VOCATIONAL)

ELECTRONIC CONTROL AND DIGITAL ELECTRONICS
NQF LEVEL 4

7 November 2022

This marking guideline consists of 6 pages.

Copyright reserved

QUESTION 1

1.1. 1.1.1 $X_C = ½\pi \times f \times c$✓ = $½\pi \times 50 \times 100 \times 10^{-6}$✓ = 31,83 Ω✓

1.1.2 $Z = (R^2 + X_C^2)^{½}$✓ = $(12^2 + 31,83^2)^{½}$✓ = 34,017 Ω✓

1.1.3 $I = V/Z$✓ = 220/34,017✓ = 6,467 A✓

1.1.4 $\phi = \tan^{-1}(X_C/R)$✓ = $\tan^{-1}(34,017/12)$✓ = 70,569°✓

1.1.5 $V_R = IR$✓ = 6,467 × 12✓ = 77,604 V✓

1.1.6 $V_C = IX_C$✓ = 6,467 × 31,83✓ = 205,845 V✓

(6 × 3) (18)

1.2 1.2.1 True
1.2.2 False

(2 × 1) (2)

[20]

QUESTION 2

2.1 2.1.1 A
2.1.2 C
2.1.3 C
2.1.4 C

(4 × 1) (4)

2.2
- Amplitude stability✓ is the ability of an oscillator to maintain constant amplitude in the output waveform.✓
- Frequency stability✓ is the ability of an oscillator to maintain its operating frequency.✓

(2 × 2) (4)

2.3
- Damped oscillation
- Undamped oscillation

(2)

2.4 $F_O = 1/(2\pi \times (LC)^{½})$✓ = $1/(2\pi \times (80 \times 10^{-6} \times 600 \times 10^{-9})^{½})$✓ = 22,972 kHz✓✓ (4)

2.5
- As a square-wave generator
- As a voltage-frequency convertor
- In pulse synchronisation
- As a clock for binary logic signal
- In digital voltmeters and switched-mode power supplies

(5)

2.6
- Operating temperature
- Change in base-emitter voltage V_{BE}
- Transistor current gain β

(3)

2.7
- The output current flows only for one half of the cycle or 180° of the input signal.
- The transistor dissipates no power with zero input signal.
- The average current drawn by the circuit is smaller than that of a class A amplifier.
- It has an efficiency of 78%. (4)

2.8
- Breakdown voltage:✓ If the voltage across the SCR exceeds the rated forward break-over voltage, the SCR will start conducting due to avalanche breakdown.✓
- Gate triggering:✓ The SCR is operated with anode voltage slightly less than the rated forward breakdown voltage and is triggered into conduction by a low-power gate pulse.✓ (4)

[30]

QUESTION 3

3.1
- The strip of copper track can loosen after components have been changed several times.
- When a copper track breaks, it may leave an invisible hairline of copper.
- This results in an intermittent connection on the track, possibly causing a short circuit.
- The relationship between components and the circuit diagram may be confusing for beginners.
- As the connecting tracks and where they are broken cannot be seen from the component side, the board must be turned over when fault-finding. (5)

3.2
- The replacement transistor must not run hot.
- If the replacement runs hot, try a different replacement or obtain the original transistor.
- Components close to the transistor can also cause the transistor to run hot even if the original transistor number is used.
- Always check the surrounding components first before fitting the transistor, otherwise the replacement transistor will blow in seconds and you will have to start again.
- Check for dry joints and leaking capacitors.
- Check for a component failure in the electronic circuit that may cause the transistor to short. (6)

3.3 3.3.1
- Wear an antistatic/grounded wrist strap.
- Handle components at the edge when possible.
- Do not touch the component leads.
- Work on an earth-grounded mat.
- Handle the circuit board containing the MOSFET components at the edges.
- Avoid touching the circuits/tracks/components.
- Use an antistatic/earthed/ground soldering iron or solder station.

(Any 5 × 1) (5)

Copyright reserved

3.3.2

- Wear an antistatic/earthed/grounded wrist strap or momentarily ground yourself on a bare metal grounded/earthed surface before touching the MOSFET.
- Use a solder sucker or solder wick to remove the soldering around the legs.
- If the component has not fallen out, repeat step 2.
- Be careful not to apply too much heat to the legs and tracks. (4)

[20]

QUESTION 4

4.1

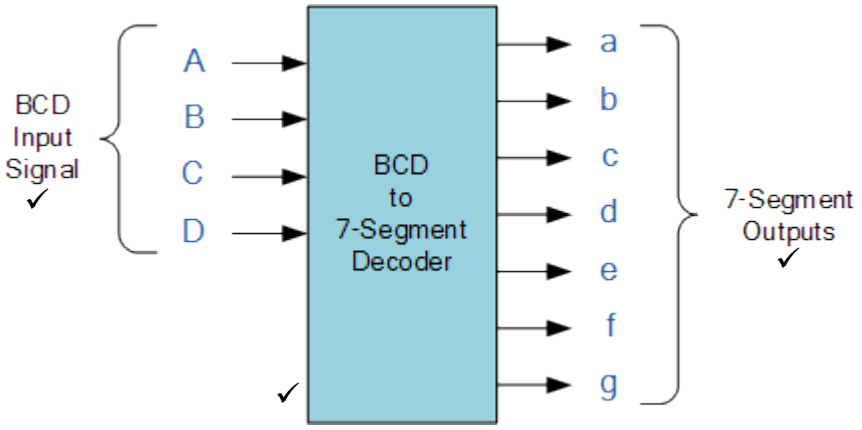

(3)

4.2

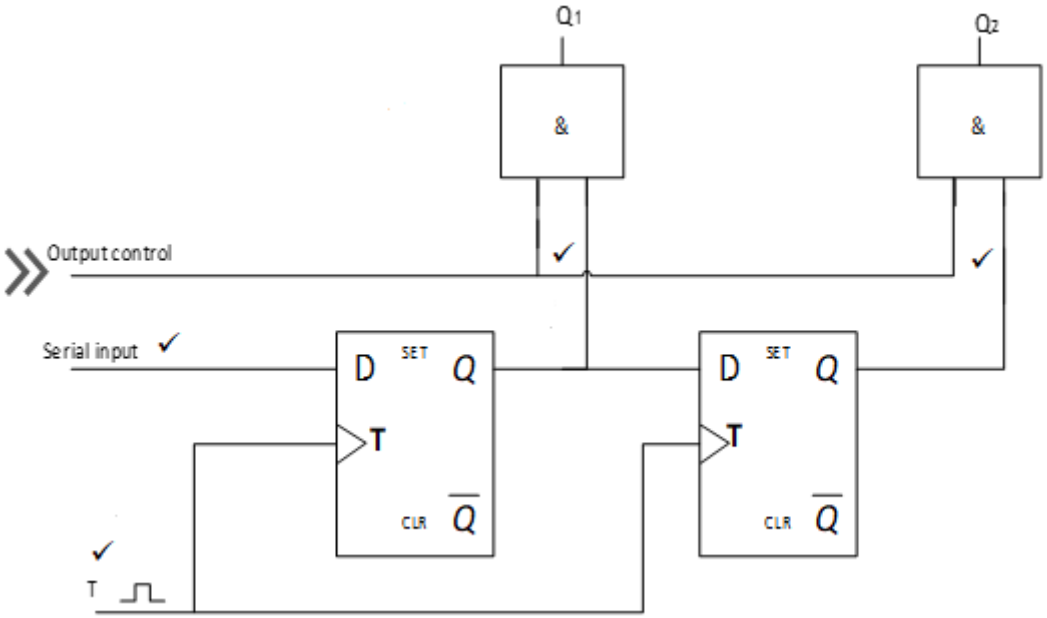

(4)

4.3

8	4	2	1
0	1	0	1

✓

$5_{10} = 0101_{8421}$✓ (2)

4.4 1334042_{10}
The mantissa is 0,1334042 and exponent is 7.✓
The floating-point number is written as $0{,}1334042 \times 10^{7}$.✓ (2)

4.5 $\overline{A+B} + A.B$
$= \overline{A}.\overline{B}$✓ + A.B✓ (2)

4.6
- There is not enough space on the hard drive.
- The swap space on the hard drive may be insufficient.
- Processor speed may be insufficient to handle software requirements.

(Any relevant answer) (2)
[15]

QUESTION 5

5.1 When power is supplied, CR2 is activated✓ by NC contact CR1.✓ When input A or input B✓ is closed, control relay CR1 is energised,✓ which will open contact CR1✓ and deactivate CR2.✓ (6)

5.2

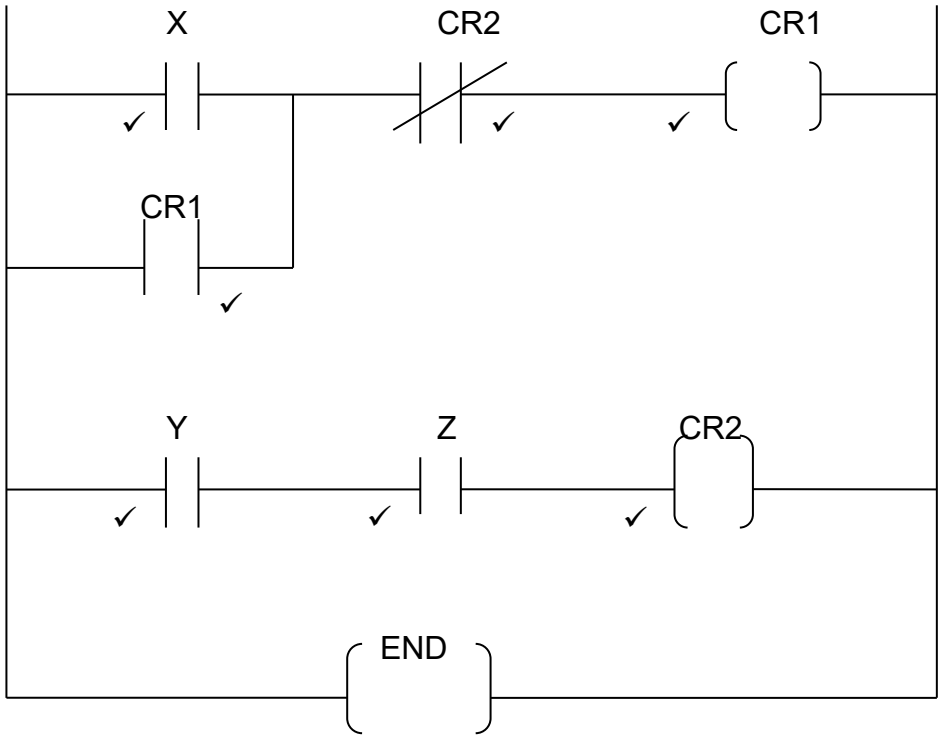

(7)

5.3 5.3.1

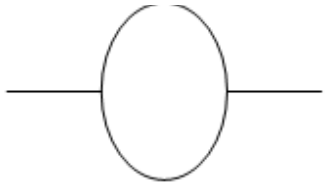

5.3.2



(2 × 1) (2)
[15]

TOTAL: 100

Copyright reserved