higher education & training

Department:
Higher Education and Training
REPUBLIC OF SOUTH AFRICA

NATIONAL CERTIFICATE (VOCATIONAL)

ELECTRICAL WORKMANSHIP
NQF LEVEL 4

(12041014)

24 November 2023 (X-paper)
09:00–12:00

Calculators and drawing instruments may be used.

This question paper consists of 8 pages.

297Q1N2324

Copyright reserved

DEPARTMENT OF HIGHER EDUCATION AND TRAINING
REPUBLIC OF SOUTH AFRICA

NATIONAL CERTIFICATE (VOCATIONAL)
ELECTRICAL WORKMANSHIP
NQF LEVEL 4
TIME: 3 HOURS
MARKS: 100

INSTRUCTIONS AND INFORMATION

1. Answer all the questions.
2. Read all the questions carefully.
3. Number the answers according to the numbering system used in this question paper.
4. Use only a black or blue pen.
5. Freehand drawings will not be allowed. Use the correct drawing instruments. A pencil may be used.
6. Round off all calculations to two decimal places.
7. Write neatly and legibly.

Copyright reserved

QUESTION 1

1.1 Electricians as well as property are exposed to possible electrical accidents daily.

1.1.1 State THREE effects of electrical accidents on humans. (3)

1.1.2 State TWO effects of electrical accidents on property and equipment. (2)

1.2 Indicate whether the following statements are TRUE or FALSE by writing only 'True' or 'False' next to the question number (1.2.1–1.2.4) in the ANSWER BOOK.

1.2.1 Work permits are not needed when installing electrical equipment in factories.

1.2.2 The lockout and tagout system is used to identify and notify workers of supplies and machinery that have been isolated.

1.2.3 Verification of isolation need not be done when working on electrical equipment.

1.2.4 Once a circuit has been isolated it is not necessary to earth adjacent parts that could become live.

(4 × 1) (4)

1.3 Earthing of conductors is common practice when working on electrical equipment.

1.3.1 Give TWO reasons why it is important to earth electrical installations and equipment.

1.3.2 Give TWO reasons for using additional earthing when performing fault finding or maintenance on electrical conductors or cables.

(2 × 2) (4)

1.4 Hazard control and risk assessment must be in place and implemented in the workplace at all times.

1.4.1 State THREE ways in which potential hazardous situations can be identified. (3 × 1) (3)

1.4.2 Explain how risk control should be performed. (2 × 1) (2)

1.5 Name the TWO factors on which risk assessment is based. (2 × 1) (2)

[20]

QUESTION 2

2.1 Draw the IEC symbol for each of the following electrical components:

2.1.1 A double-pole isolator

2.1.2 A transformer

2.1.3 A battery cell

2.1.4 A three-phase circuit breaker

2.1.5 A three-phase overload

(5 × 1) (5)

2.2 Draw the fully labelled circuit diagram of a three-heat stove switch in the high position or in position 3. (4 × 1) (4)

2.3 Name the components indicated in the diagram of a Simmerstat given below. Write only the answer next to the letter (A–C) in the ANSWER BOOK.

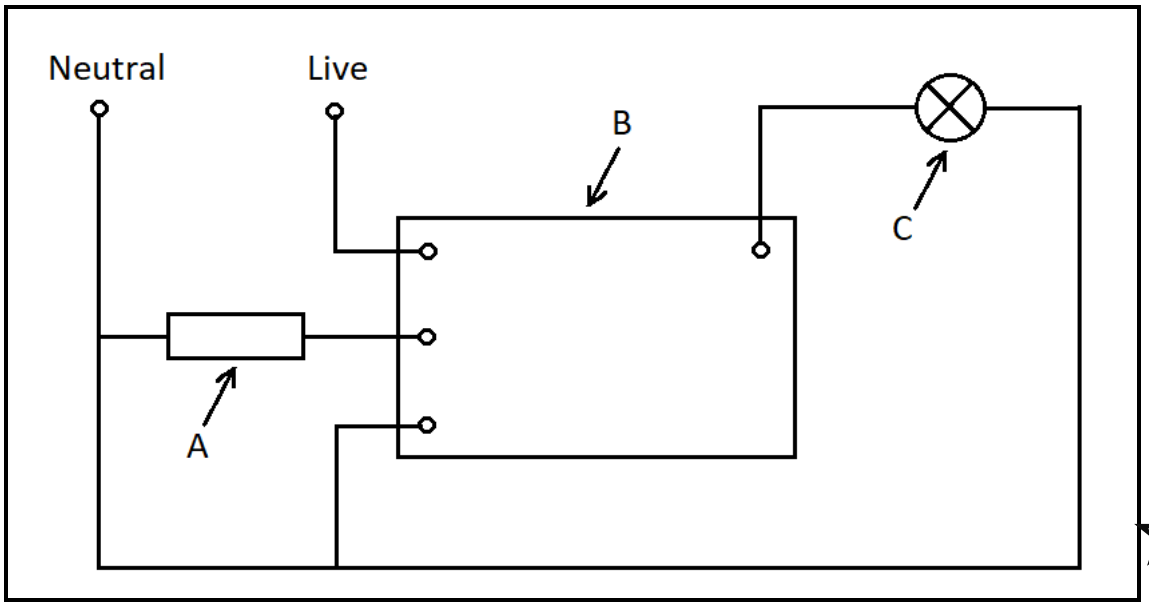

(3 × 1) (3)

2.4 Explain the difference between a *short-circuit current* and a *fault current*.

(3 × 1) (3)

2.5 The cross-sectional area of a copper XLPE-insulated conductor is 20 mm^2.

Determine the maximum time that this cable can withstand a fault current of 1,8 kA.

HINT: $Sp = \frac{\sqrt{I^2 t}}{k}$ $I_{FC} = CIF \times A$

Refer to the table given below for the necessary information.

Type of insulation	Type of conductor	k or CIF
PVC	Copper	143
PVC	Aluminium	95
PVC	Steel	52
XLPE	Copper	176
XLPE	Aluminium	116
XLPE	Steel	64
Butyl rubber	Copper	166
Butyl rubber	Aluminium	110
Butyl rubber	Steel	60

(5 × 1) (5)
[20]

QUESTION 3

3.1 Choose a/an word/item from COLUMN B that matches a description in COLUMN A. Write only the letter (A–F) next to the question number (3.1.1–3.1.5) in the ANSWER BOOK.

COLUMN A		COLUMN B	
3.1.1	To describe the brightness of a lamp	A	luminous efficiency or efficacy (k)
3.1.2	When a specific amount of light falls onto a surface	B	luminous flux (F)
		C	brightness
3.1.3	The light-emitting ability of a light source in a general or particular direction	D	luminous intensity (i)
		E	illuminance (E)
3.1.4	The ratio of luminous flux to an electrical power input	F	luminance (L)
3.1.5	The total amount of light emitted in all directions from a light source		

(5 × 1) (5)

3.2 Indicate whether the following statements are TRUE or FALSE by writing only 'True' or 'False' next to the question number (3.2.1–3.2.3) in the ANSWER BOOK.

3.2.1 Good lighting should provide light in suitable colours.

3.2.2 Indirect lighting must provide 90-95% light on objects or surfaces.

3.2.3 The illumination level must enable workers to see objects clearly and effectively.

(3 × 1) (3)

3.3 Name THREE types of lamps that are currently available. ☆ (3 × 1) (3)

3.4 Refer to the circuit diagram given below to answer the questions:

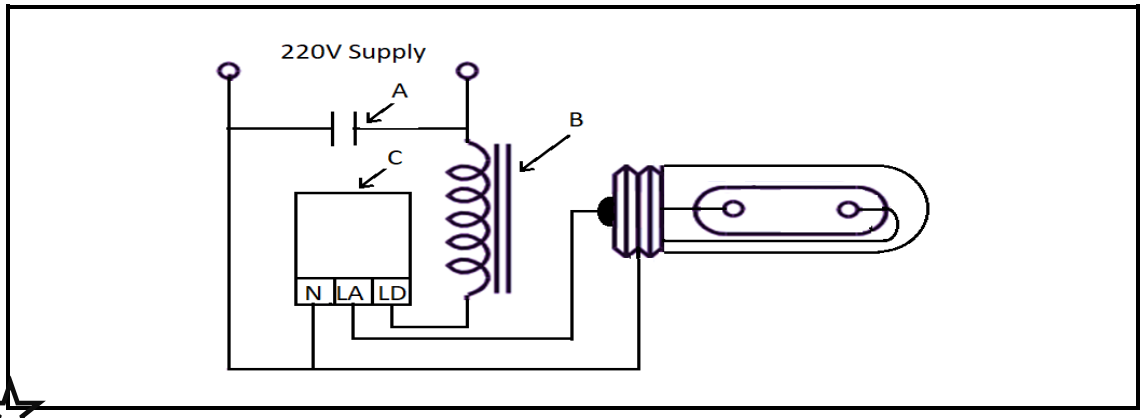

☆

3.4.1 Identify the type of lamp shown in the circuit diagram. (1)

3.4.2 Name the components indicated in the circuit diagram by writing only the answer next to the letter (A–C) in the ANSWER BOOK. (3)

3.5 State TWO methods that can be used to minimise the dangerous effect caused by fluorescent lamps in the workplace. (2 × 1) (2)

3.6 Explain the operation of LEDs used in LED lamps. ☆ (3 × 1) (3)

[20]

QUESTION 4

4.1 Indicate whether the following statements are TRUE or FALSE by writing only 'True' or 'False' next to the question number (4.1.1–4.1.3) in the ANSWER BOOK.

4.1.1 A class I appliance has double insulation with no earth terminal.

4.1.2 Simulation can be used when performing fault finding on appliances and power tools.

4.1.3 Continuity testing or measurements are not necessary before reconnecting a repaired appliance to the power source or supply.

(3 × 1) (3)

☆

4.2

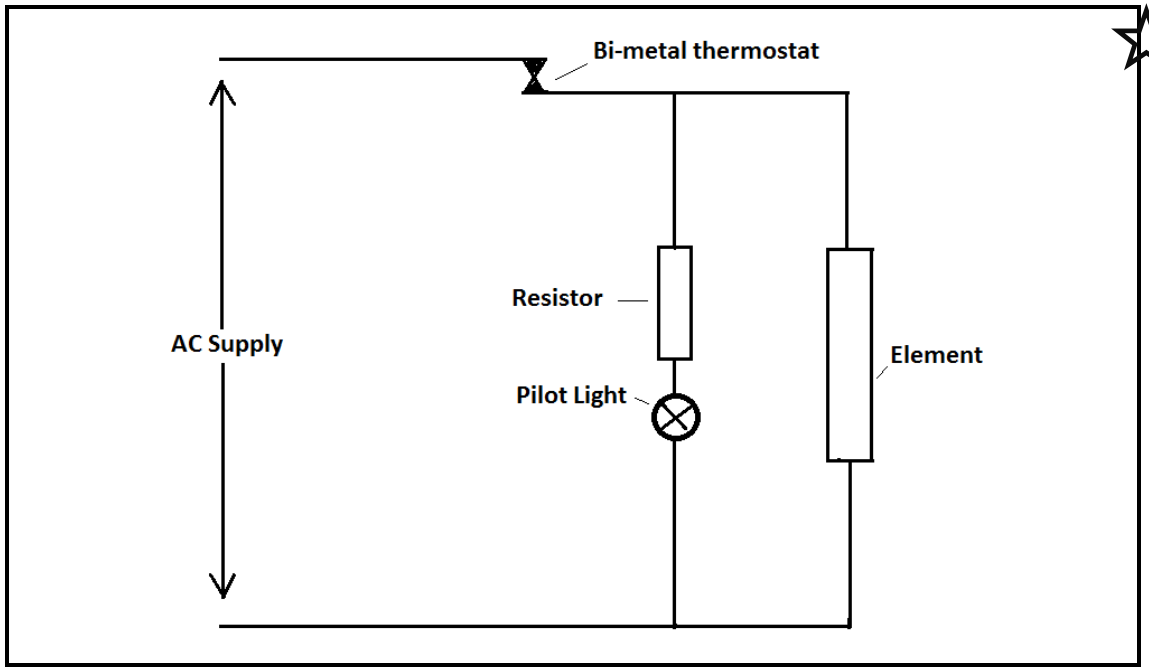

4.2.1 Identify the circuit diagram (appliance) given above. (1)

4.2.2 The indication light switches on, but the element does not heat up.

Redraw the circuit diagram provided in the ANSWER BOOK and show the test instrument and how it should be used to perform a continuity test from the live supply point/terminal through the element to the neutral supply point/terminal. (6 × 1) (6)

4.3 Explain ONE possible cause and ONE corresponding repair to be done to each of the following faulty appliances and power tools:

4.3.1 The kettle indication light does not switch on and the element does not heat up.

4.3.2 One stove plate does not heat up.

4.3.3 No hot water is supplied from the geyser or hot-water cylinder.

(3 × 2) (6)

4.4 Safe work practices are of the utmost importance when repairing electrical equipment.

Explain TWO safety procedures to follow when performing fault finding or repair work on appliances or power tools. (2 × 2) (4)

[20]

Copyright reserved

QUESTION 5

5.1 There are TWO groups of electric machines used, namely AC and DC machines.

Name THREE types of DC machines. (3 × 1) (3)

5.2 Precise preparation is very important before electrical installations can be started.

5.2.1 Explain TWO requirements or checks that a technician should do when planning an electrical machine installation.

5.2.2 Explain TWO tests/checks or any other requirements to be conducted by the technician when doing the actual installation on electrical machines.

(2 × 2) (4)

5.3 Draw the fully labelled circuit diagram of a permanent capacitor motor in the reverse rotational direction. (5 × 1) (5)

5.4 Mechanical and electrical inspections must be done when commissioning electric motors or machines.

State FOUR electrical tests or checks that must be done when commissioning electric motors. (4 × 1) (4)

5.5 Regular maintenance must be done on electric machines to increase their safety, lifetime and efficiency.

State FOUR inspections that must be done on machine guards. (4 × 1) (4)

[20]

TOTAL: 100

Copyright reserved