higher education & training

Department:
Higher Education and Training
REPUBLIC OF SOUTH AFRICA

MARKING GUIDELINE

NATIONAL CERTIFICATE (VOCATIONAL)

ELECTRICAL WORKMANSHIP
NQF LEVEL 4

24 November 2023

This marking guideline consists of 8 pages.

Copyright reserved

QUESTION 1

1.1 1.1.1
- Electrocution/Death
- Burns
- Electric shock
- Injury due to falls
- Paralysis
- Nerve destruction
- Unable to breathe
- Heart failure
- Cramps
- Loss of body control (Any 3 × 1) (3)

1.1.2
- Fires
- Burns
- Overheated contacts
- Overheated wiring
- Overheated cables
- Melting of components of equipment
- Arcing of contacts
- Sparking of contacts (Any 2 × 1) (2)

1.2 1.2.1 False
1.2.2 True
1.2.3 False
1.2.4 False
(4 × 1) (4)

1.3 1.3.1
- To minimise the risk of electrical accidents.
- To minimise the risk of electric shock.
- To minimise the risk of electrocution/death.
- To protect equipment from damage.
- To protect machinery from damage.
- To protect property/buildings from damage.
- To discharge any fault current to earth. (Any 2 × 1) (2)

1.3.2
- To discharge any stored electrical energy to earth.
- To ensure that any unexpected fault current is discharged to earth.
- To prevent isolated conductors from becoming live.
- To ensure that the complete installation is well-earthed.

(Any 2 × 1) (2)

Copyright reserved

1.4 1.4.1

- Knowledge from past incidents.
- Knowledge from past experiences.
- Ask workers if they have any safety issues to report.
- Regular safety inspections of the work area must be done.
- Information regarding safety equipment must be reviewed regularly.
- Check long-term health-related safety hazards, for example noise and chemicals.
- Ventilation
- Consider the possibility of anything that can go wrong in the workplace.

(Any 3 × 1) (3)

1.4.2

- Develop a plan to control risks associated with possible hazards.
- Minimise hazards.
- Inform workers of any potential hazards.
- Use verbal instructions or signage.
- Isolate any hazards or potential hazards immediately.

(Any 2 × 1) (2)

1.5

- Probability
- Severity

(2 × 1) (2)

[20]

QUESTION 2

2.1

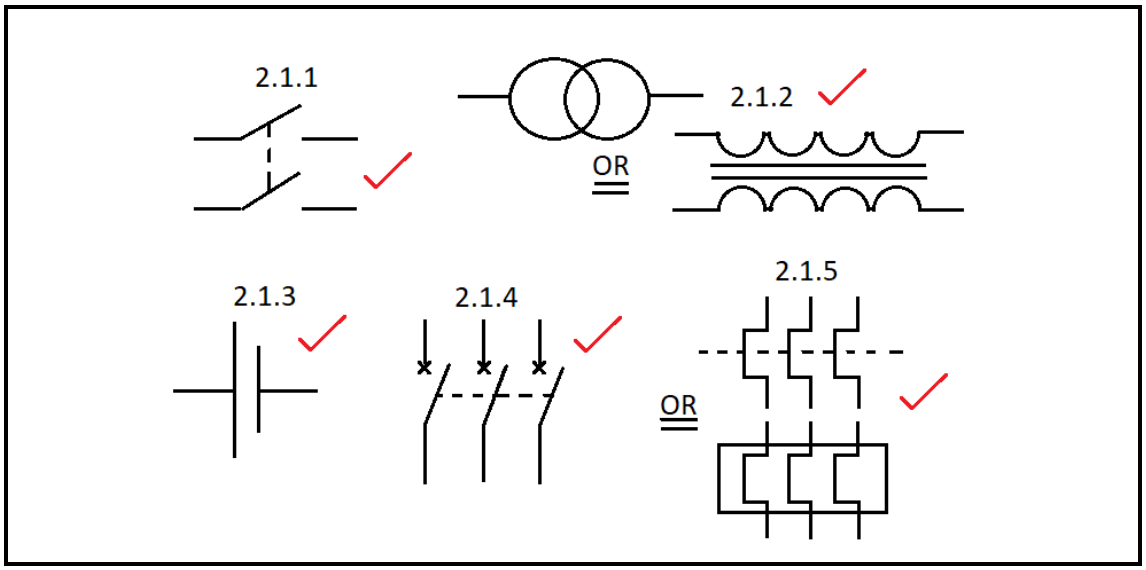

(Any other correct alternative symbols) (5 × 1) (5)

2.2

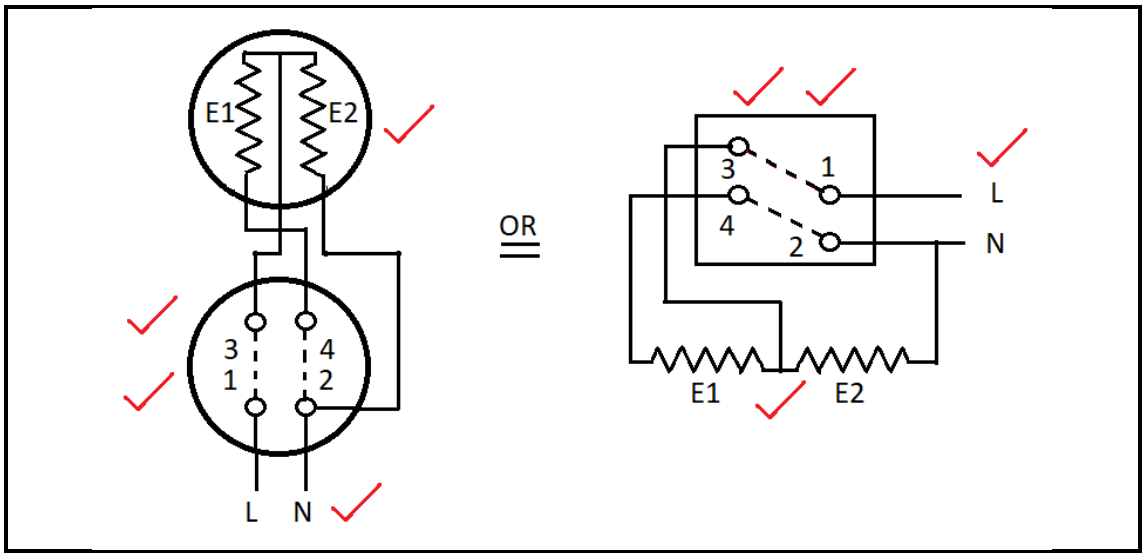

(1 mark if the diagram is correctly drawn.)
(2 marks for the correct switch position.)
(1 mark for the correct labelling.) (4)

2.3
A Load or element
B Simmerstat switch
C Pilot or indication light (3 × 1) (3)

2.4
- A short-circuit current has no resistance✓
- between the wires/circuits or system✓
- whereas a fault current has a resistance that draws additional circuit current.✓

OR

- A short-circuit current is the maximum current
- that flows between conductors when they are in contact with each other,
- whereas a fault current occurs when the circuit draws more current than the load ampere rating. (Any 1 × 3) (3)

2.5

$Sp = \frac{\sqrt{I^2 t}}{k}$

$20 = \frac{\sqrt{(1800)^2 \times t}}{176}$ ✓

$20 \times 176 = \sqrt{(1800)^2 \times t}$ ✓

$3520 = 1800\sqrt{t}$ ✓

$\sqrt{t} = \frac{3520}{1800} =$ ✓

$t = 3.82$ sec✓

OR

$I_{FC} = CIF \times A$

$\sqrt{t} = \frac{176 \times 20}{1800}$ ✓

$t = \frac{(176 \times 20)^2}{1800^2}$ ✓

$= \frac{3520^2}{1800^2}$ ✓

$= \frac{12390400}{3240000}$ ✓

$= 3.82$ sec✓

(5 × 1) (5)
[20]

QUESTION 3

3.1
3.1.1 F
3.1.2 E
3.1.3 D
3.1.4 A
3.1.5 B

(5 × 1) (5)

3.2
3.2.1 True
3.2.2 False
3.2.3 True

(3 × 1) (3)

3.3
- Filament lamps
- Arc lamps
- Discharge lamps

NOTE: Other acceptable answers:
- LED lamps
- Incandescent
- Compact fluorescent
- Fluorescent or standard fluorescent
- Smart bulbs
- Mercury vapour
- Metal halide
- High-pressure vapour
- Low-pressure vapour
- Neon

(Any 3 × 1) (3)

3.4
3.4.1 High-pressure sodium vapour lamp (1)

3.4.2 A. Capacitor OR power factor correction OR power correction capacitor (PFC)
B. Inductor or choke
C. Ignitor

(3 × 1) (3)

3.5
- Use twin fluorescent lamp fittings.
- Connect a capacitor in series with one of the twin fluorescent tubes/lamps.
- If a three-phase supply is available, connect the fluorescent lamp fittings to alternate phases.

(Any 2 × 1) (2)

3.6
- LEDs are light-emitting semiconductors.
- Light energy is emitted at the PN junction by electron movement.
- The light is emitted through a window in the top surface.

(Any other correct logical explanation) (3 × 1) (3)

[20]

QUESTION 4

4.1 4.1.1 False
4.1.2 True
4.1.3 False

(3 × 1) (3)

4.2 4.2.1 An electric iron OR iron (1)

4.2.2

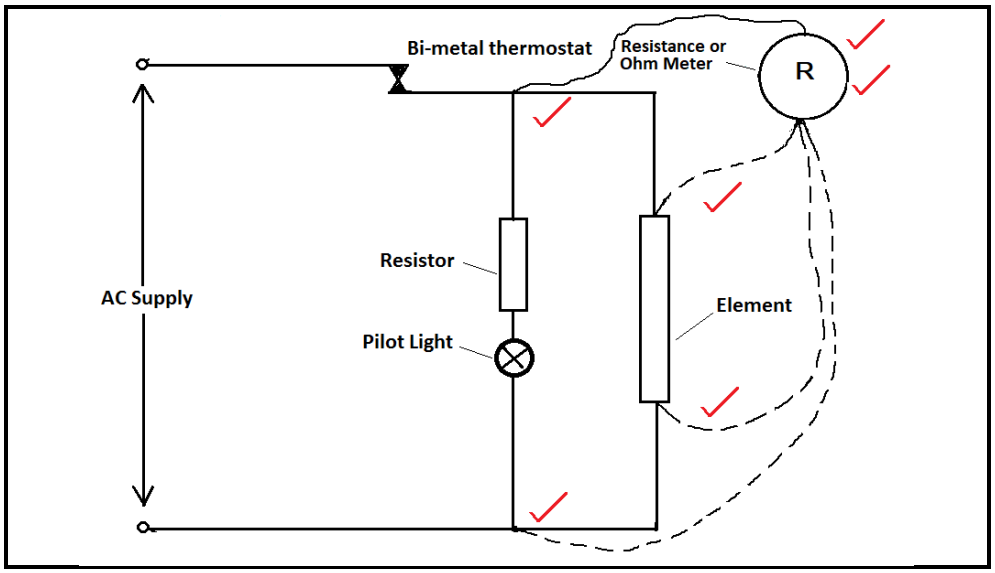

(1 mark for the ohmmeter name/labelling)
(1 mark for the ohmmeter symbol)
(1 mark for the live terminal/point)
(1 mark for one point on the element)
(1 mark for another point on the element)
(1 mark for the neutral terminal/point) (6)

4.3 4.3.1

- No power from the plug.✓ - Reconnect the supply.✓
- A faulty kettle switch. - Replace the kettle switch.
- A disconnection or loose wire in the live part/path of the circuit. - Reconnect or replace the wire/wires.
- A disconnection or loose wire in the neutral part/path of the circuit. - Reconnect or replace the wire/wires.
- Power cord faulty. - Replace the power cord.

(Any ONE possible fault and repair) (Any 1 × 2) (2)

4.3.2

- Plate element is an open circuit.✓ - Replace stove plate.✓
- Loose wires. - Secure or fasten loose wires.
- Blown fuse if stove plates have individual fuses. - Replace fuse.
- Faulty stove plate switch. - Replace the stove-plate switch.
- Faulty wires. - Reconnect or replace faulty wires.

(Any ONE possible fault and repair) (Any 1 × 2) (2)

Copyright reserved

4.3.3
- Geyser/H.W.C. element open circuit or defective.✓ - Replace Geyser/H.W.C element.✓
- Geyser/H.W.C. switched off. - Switch on the power.
- Faulty geyser/H.W.C. circuit breaker. - Replace circuit breaker.
- Faulty geyser/H.W.C. isolator switch. - Replace isolator switch.
- Thermostat faulty, open circuit. - Replace thermostat.
- Wiring fault. - Repair or replace faulty wiring.

(Any ONE possible fault and repair) (Any 1 × 2) (2)

4.4
- Use lockout and tagout procedures.
- Machines and equipment must be isolated.
- Identification of the type of equipment to be repaired.
- Isolation must be verified or checked.
- Isolation tests must be done.
- Earthing must be checked.
- Cord and plug of equipment must also be locked out.
- The prove-test-prove isolation test method must be used.
- Additional earthing must be used when necessary. (Any 2 × 2) (4)

[20]

QUESTION 5

5.1
- Shunt motors
- Series motors
- Compound motors OR long-shunt motors OR short-shunt motors (3 × 1) (3)

5.2 5.2.1 Check:
- The type of motor foundation required
- The type of operating environment
- The proper sizing of the machines/motors
- The IP rating of the machine/motor
- That the site must is clean
- Whether there is any damage to the machine/motor
- Check that the machine/motor is lubricated
- Check the type of available electrical supply
- Check the distance to the available supply point (Any 2 × 1) (2)

5.2.2
- Electrical connections must be checked or tested.
- Check the motor positioning.
- Machine guards and covers must be fitted.
- Shaft alignment must be checked.
- Machine/motor couplings must be secure.
- Machine/moto couplings must be adjusted/aligned correctly.
- Electrical control gear must be checked or tested.
- All machine safety guards must be checked.
- Check that all mounting bolts are secure. (Any 2 × 1) (2)

Copyright reserved

5.3

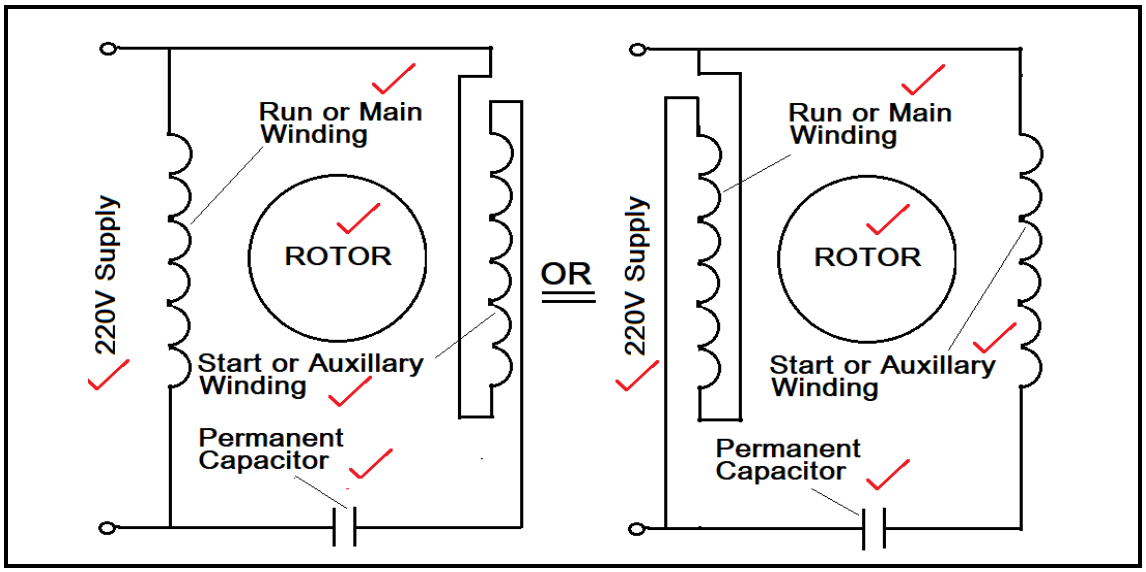

(5 × 1) (5)

5.4

- Test the supply voltage.
- Check the running/operational motor voltage.
- Test the motor winding resistances.
- Test the motor circuits for continuity.
- Use a clamp-on ammeter to test the current drawn by the motor.
- Check the nameplate data for the maximum current drawn by the motor.
- Perform open-circuit tests.
- Perform short-circuit tests.
- Perform insulation resistance tests between windings.
- Perform insulation resistance tests between windings and earth.
- Check that the machine/motor is correctly earthed. (Any 4 × 1) (4)

5.5

- Clean off any oil or grease from over-greased bearings.
- Check that the guards are rust-free.
- Look for outside cracks or any other damage to the guards.
- The guards must be securely mounted.
- Check for inside damage caused by the drive belt or chain contact with the guard.
- Make sure that the guards are clean and free from dust, grime or debris.

(Any 4 × 1) (4)

[20]

TOTAL: 100

Copyright reserved