higher education & training

Department:
Higher Education and Training
REPUBLIC OF SOUTH AFRICA

MARKING GUIDELINE

NATIONAL CERTIFICATE (VOCATIONAL)

ELECTRICAL WORKMANSHIP
NQF LEVEL 4

15 November 2022

This marking guideline consists of 8 pages.

Copyright reserved

QUESTION 1

1.1 1.1.1 False
1.1.2 True
1.1.3 True
1.1.4 False

(4 × 1) (4)

1.2 1.2.1 F
1.2.2 A
1.2.3 D
1.2.4 E
1.2.5 C

(5 × 1) (5)

1.3 1.3.1
- Safety procedures to be implemented before work is started
- The equipment to be worked on and its exact location
- The nature of work to be carried out
- Identification and control of any risks arising from such work
- The person to which the permit is issued
- Clearly define hazardous areas and points of isolation
- Where conductors will be earthed
- Which other services may be affected
- Own workers who will be working on site
- Other workers such as contractors who will be working on site

(Any 3 × 1) (3)

1.3.2
- Locate all energy isolating devices.
- Identify all energy isolating devices.
- Make certain which switch or valve applies to the machine/supply to be isolated.
- Make sure of any other isolating devices which applies to the isolated machine/supply.
- Lock all mechanical parts that still may have residual energy, e.g., flywheels, springs, pneumatic or hydraulic systems.
- Discharge equipment able of storing a charge like high-voltage cables, overhead lines and capacitors.

(Any 2 × 1) (2)

1.4
- Identify
- Prioritise
- Act

(Any 2 × 1) (2)

1.5 Major injuries such as broken bones,✓ amputation, brain damage, etc. are very serious, whereas fatal injuries cause death✓ e.g., being electrocuted/ electrocution, crushed/crushing. (2)

1.6
- Head protection: Hard hats✓
- Face protection: Safety goggles,✓ safety glasses, shields, gas-welding goggles or arc-welding helmets
- Body protection: Overalls, leather aprons or welding jackets
- Hand protection: General purpose gloves (material/rubber), high-voltage rubber gloves and leather gloves (for arc or gas welding).
- Foot protection: Safety boot, safety shoe or arc-welding spats. (Any 2 × 1) (2)

[20]

QUESTION 2

2.1 2.1.1 International Electrotechnical Commission

2.1.2 IEC symbols are used in electrical circuitry to identify or recognise components and supplies.

(2 × 1) (2)

2.2
- The live is switched to A1 of the contactor coil✓ or the contactor coil is energised.
- The holding, latching or retaining contacts 13 and 14 (auxiliary contacts 53 and 54 or 83 and 84) close,✓ creating a parallel holding path across the start push-button switch. (3)

2.3

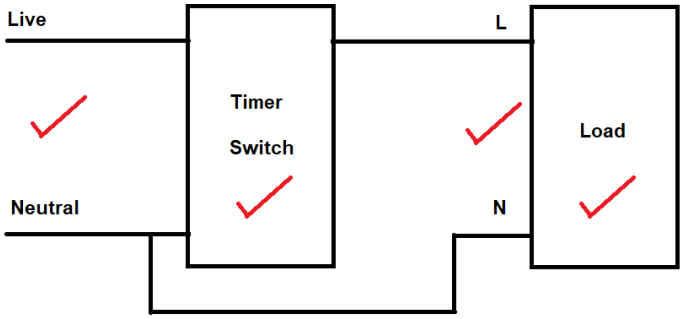

(4)

2.4 2.4.1 A new electrical installation shall not be connected to the supply✓ unless the supply includes a protective conductor✓ or earth conductor. (2)

2.4.2 $V_{ph} = \frac{V_l}{\sqrt{3}}$

$V_{ph} = \frac{388}{\sqrt{3}}$✓

V_{ph} = 224,01 V ✓

V = 224,01 × 5%
= 11,20✓
= 224,01 - 11,20
= 212,81 V✓ (4 × 1) (4)

2.5 2.5.1 $Sp = \frac{\sqrt{(I^2 x\ t)}}{k}$ OR $I_{fc} = \frac{CIF \times A}{\sqrt{t}}$

$k = \frac{\sqrt{(850^2\ x2)}}{20}$ ✓

$k = \frac{\sqrt{1445000}}{20}$ ✓

$= \frac{1202,0815}{20}$ ✓

$k = 60,10$

$k = 60$ ✓

$CIF = \frac{I_{fc} \times \sqrt{t}}{A}$ ✓

$= \frac{850 \times \sqrt{2}}{20}$ ✓

$= \frac{1202.0815}{20}$ ✓

$CIF = 60,10$

$CIF = 60$ ✓

(4 × 1) (4)

2.5.2 Butyl Rubber Steel (1)

Type of insulation	Type of conductor	k or CIF
PVC	copper	143
PVC	aluminium	95
PVC	steel	52
XLPE	copper	176
XLPE	aluminium	116
XLPE	steel	64
butyl rubber	copper	166
butyl rubber	aluminium	110
butyl rubber	steel	60

[20]

QUESTION 3

3.1 3.1.1 D
3.1.2 C

(2 × 1) (2)

3.2

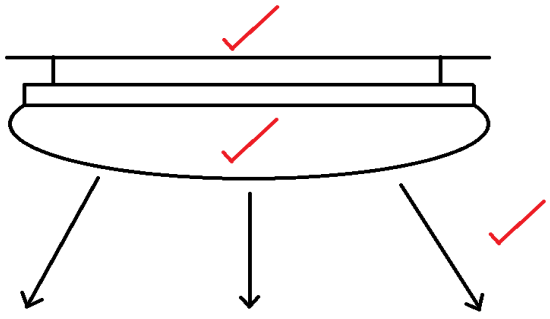

(3)

3.3
- Electrical current passes through the tungsten filament.
- A volt drop occurs which consumes power producing heat.
- The temperature rises, causing the filament to glow.

(Any logical correct explanation 3 × 1) (3)

3.4

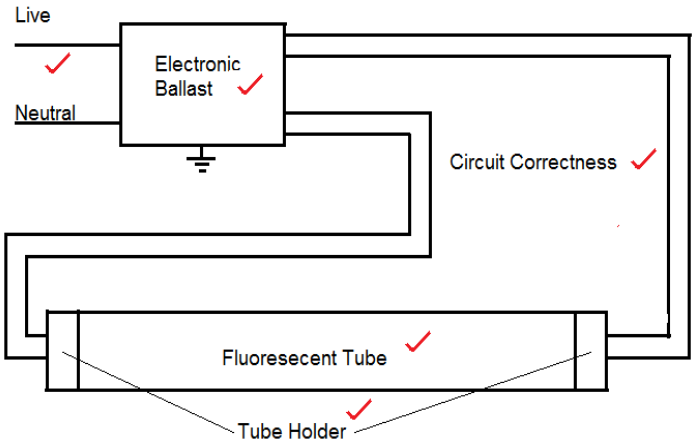

(5)

3.5 3.5.1
- Glow starter
- Thermal starter (1)

3.5.2
- Initially completes the circuit for preheating the electrodes
- Opens the circuit providing a voltage ignition kick (1)

3.6 3.6.1 The stroboscopic effect (1)

3.6.2
- Use twin-lamp fluorescent fittings.✓ A capacitor must be connected in series with the ballast of one tube.✓
- Use a three-phase supply if available.✓ Connect fluorescent fittings to alternative phases.✓

(2 × 2) (4)
[20]

QUESTION 4

4.1
- Observation
- Asking questions
- Simulation
- Measurements
- Sound
- Smell
- Identification of loss of function
- Operational tests
- Comparison
- Previous fault occurrences
- Use of manufacturer manual or circuit diagrams (Any 3 × 1) (3)

4.2 4.2.1 Electric circuit grounded to the iron✓ – an earth-leakage fault.

4.2.2 Check the wiring and/or element with an ohm meter and/or insulation resistance tester.✓ Replace/repair wiring or element.

4.2.3 Worn drum bearings✓ or worn pulley/belt or loose panels.

Copyright reserved

4.2.4 Replace bearings✓ or check and replace pulley/belt or tighten any loose panels.

4.2.5 Faulty plug,✓cord, components, e.g., on/off switch or faulty internal wiring.

4.2.6 Replace and/or check plug wiring,✓ or test/replace the cord or test wiring continuity, or test and replace faulty components, e.g., on/off switch. (6 × 1) (6)

4.3
- Only use identical replacement parts.
- Do not use solvents when cleaning – it can damage parts.
- Use a clean cloth when removing dust, dirt, oil or grease.
- Do not allow any strong fluids to make contact with plastic and other sensitive parts, e.g., brake fluid, petroleum products or penetrating oils.
- Perform electrical tests (names/explanations of tests are also acceptable).
- Continuity test (open-circuit and short-circuit test)
- Insulation resistance between coils.
- Insulation resistance between coils and earth.
- Earth continuity test.
- Perform mechanical tests (names/explanations of tests are also acceptable).
- Check, clean or replace bearings in required.
- Check brushes and commutator for wear and sparking damage.
- Check switches and terminal contacts.
- Check shaft for play.
- Check for damaged gears.
- Perform regular maintenance tests/checks. (Any 4 × 1) (4)

4.4
- Length
- Type
- Current rating
- Insulation voltage
- Temperature rating
- Rigidity
- Flexibility (Any 4 × 1) (4)

4.5
- Identification of equipment/know the power tool and its specifications.
- Recheck/test all work done.
- Recheck/test the complete appliance/power tool.
- Perform/do resistance/insulation/insulation resistance test.
- Perform/do mechanical checks/tests.

(Any other logical/correct/practical/experienced answers 3 × 1) (3)

[20]

QUESTION 5

5.1
- Uncertainty about the load
- Allowance for growth
- Rounding up to the next size
- Availability
- Cost difference, e.g., sometimes it is better to pay slightly more on the long term (Any 3 × 1) (3)

5.2
- To protect motors from excessive current
- To protect motors from overheating
- To protect motors from burn-out
- Overload device delays allow motors time to start under high start-up current
- Prevents motors from restarting automatically once tripped
- Allows motors to start up correctly after tripping (Any 3 × 1) (3)

5.3
- To test the condition of the insulation of motor windings
- To test the insulation between windings
- To test the insulation between the windings and earth
- To subject the winding insulation to approximately double the supply voltage of motors. (Any 3 × 1) (3)

5.4
- High start-up current can damage DC motor armatures at start-up.
- Additional resistances must be added in series to the armature circuit when switched on.
- The resistance will be reduced/decreased as the motor reaches operating speed.
- These resistances are placed in the face-plate motor starter.
- Initially the full resistance will be in the circuit. (Any 3 × 1) (3)

5.5

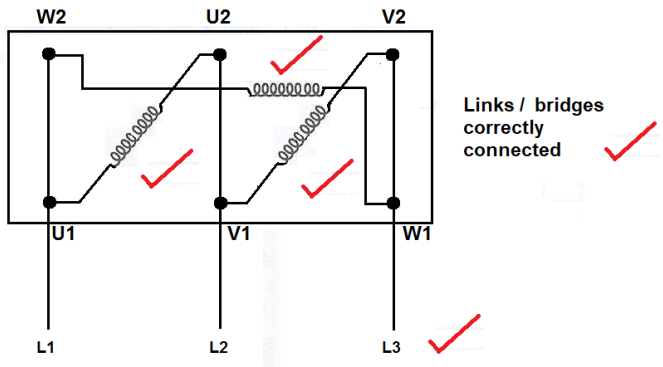

(5)

5.6
- Uncertainty about the load/check the type of load used.
- Clean by using compressed air.
- Check bearings.
- Regrease bearings.
- Check belts, gears, couplings or loose fittings.
- Check brushes and/or commutators.
- Check switches and/or terminal contacts.
- Check end plates and/or shaft play.
- Check for damaged gears.
- Check relay contacts for burns and/or wear.
- Test motor windings.
- Check foundation studs.
- Check mounting structures, e.g., foundations/frames or framework.
- Check the manufacturer specifications. (Any 3 × 1) (3)

[20]

TOTAL: 100

Copyright reserved