higher education & training

Department:
Higher Education and Training
REPUBLIC OF SOUTH AFRICA

MARKING GUIDELINE

NATIONAL CERTIFICATE (VOCATIONAL)

ELECTRICAL SYSTEMS AND CONSTRUCTION
NQF LEVEL 4

17 November 2022

This marking guideline consists of 8 pages.

Copyright reserved

QUESTION 1

1.1 1.1.1 D
1.1.2 E
1.1.3 F
1.1.4 B
1.1.5 A

(5 x 1) (5)

1.2 Medium-voltage networks distribute the electric energy (between 1 kV and 44 kV) ✓to the secondary distribution substations✓ whilst the low-voltage network is the 240 V network✓ installed in residential areas by qualified electricians. ✓ (4)

1.3 They make a loud bang when they are triggered and are thus not suitable for use in residential areas. (1)

1.4
- It helps minimise the voltage drop.
- It helps reduce or eliminate ampacity adjustment factors when the conductors are installed underground.
- Primary metering saves on average of 5% kWh charges.
- The distribution transformer allows the user to adjust the transformer ratio to raise or lower the secondary voltage.
- It carries electricity closer to the load (consumers).
- It takes advantage of reduced currents at higher voltages, which require smaller and fewer conductors.

(Any 2 x 1) (2)

1.5 1.5.1 Transformers are used for voltage regulation, isolation✓ and increasing or decreasing the amount of voltage across a load. ✓

1.5.2 Metering equipment is used to monitor the distribution and use of electricity,✓ and to charge consumers for the electricity they use.✓

(2 x 2) (4)

1.6
- The turbine/ alternator combination is slowly brought up to speed.
- Once the alternator is close to working speed, the electromagnetic core (field windings) is carefully energised while the shaft of the alternator is connected to the mechanical load.
- Phase monitoring is then used to adjust the speed until the generator is in phase with the grid, before it is connected to the grid.
- The current is then carefully increased until the system is delivering full power.

(4 x 1) (4)

[20]

Copyright reserved

QUESTION 2

2.1

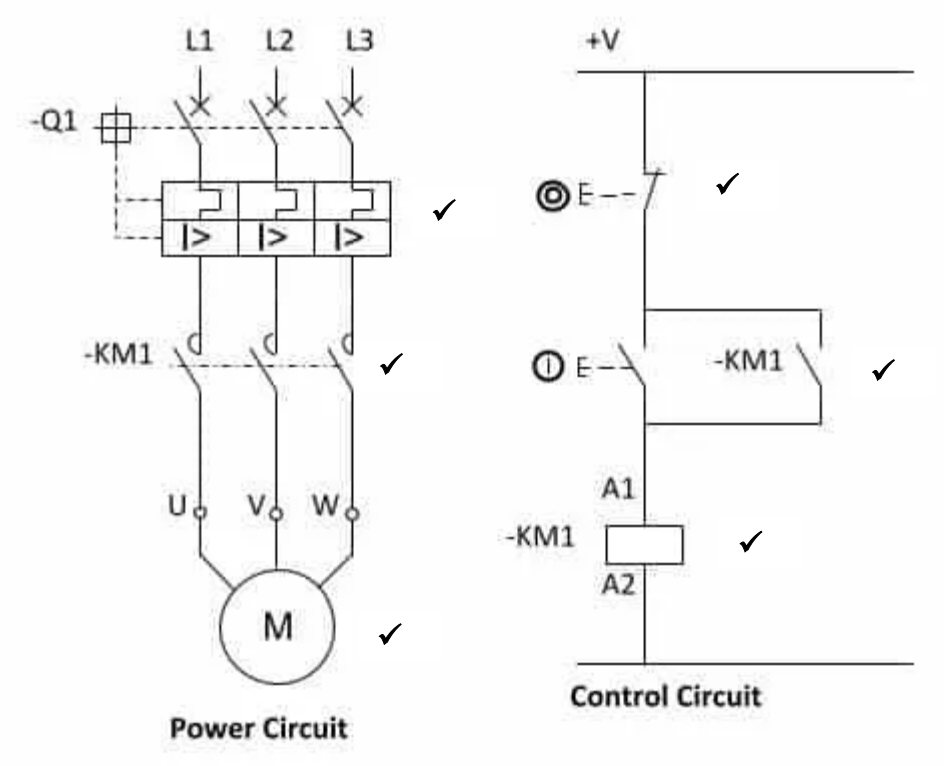

(6)

2.2
- 3-phase power supply
- Contactors
- Fuses
- Circuit breakers
- Motor
- Conductors
- Overload relay
- Stop button
- Start button
- Emergency stop button

(Any 3 x 1)_ (3)

2.3
- Damage to property and equipment.
- Electrical fires.
- Personal injury or death.

(Any 2 x 1) (2)

2.4 It is used for the switching of configurations. ✓

OR

The timer is used in the star-delta starter to switch the motor from star to delta✓ after gaining 80% of the rated speed.✓ (1)

2.5
- AC hipot tests
- DC hipot tests
- Ground bond/ continuity tests
- Insulation resistance tests
- Functional run tests
- Line leakage tests

(Any 3 x 1) (3)
[15]

QUESTION 3

3.1
- The geographic location of the major elements of the network.
- A detailed description of the medium-voltage distribution network.
- The resources needed to keep the network functioning properly.
- Future plans to expand the network in line with expected demand.
- A timetable for reviewing the NDP, to keep it up to date.

(Any 3 x 1) (3)

3.2 3.2.1 Additional sagging may bring conductors closer to the ground, ✓ and increase the risk of accidental contact or shorting between conductors as they sway in the wind. ✓

3.2.2 Too much tension may increase stretching and cause breakage. ✓ A greater line tension may require stronger poles and attachment points, which increase overall cost. ✓

(2 x 2) (4)

3.3
- A right of way.
- Power-line and/ or electrical servitudes.
- Pipeline servitudes.
- Road-widening servitudes.
- Municipal services servitude.
- Building-line servitudes.

(Any 4 x 1) (4)

3.4 3.4.1 30 to 50 meters (1)

3.4.2 1,5 m (1)

3.4.3 Stays are used to stabilise poles, ✓ especially where the direction of the overhead lines changes, pulling a pole sideways. ✓ (2)

3.5
- Remove and dispose of surplus material.
- Restore the site according to environmental standards and the land owner's requirements.

(2 x 1) (2)
[15]

QUESTION 4

4.1

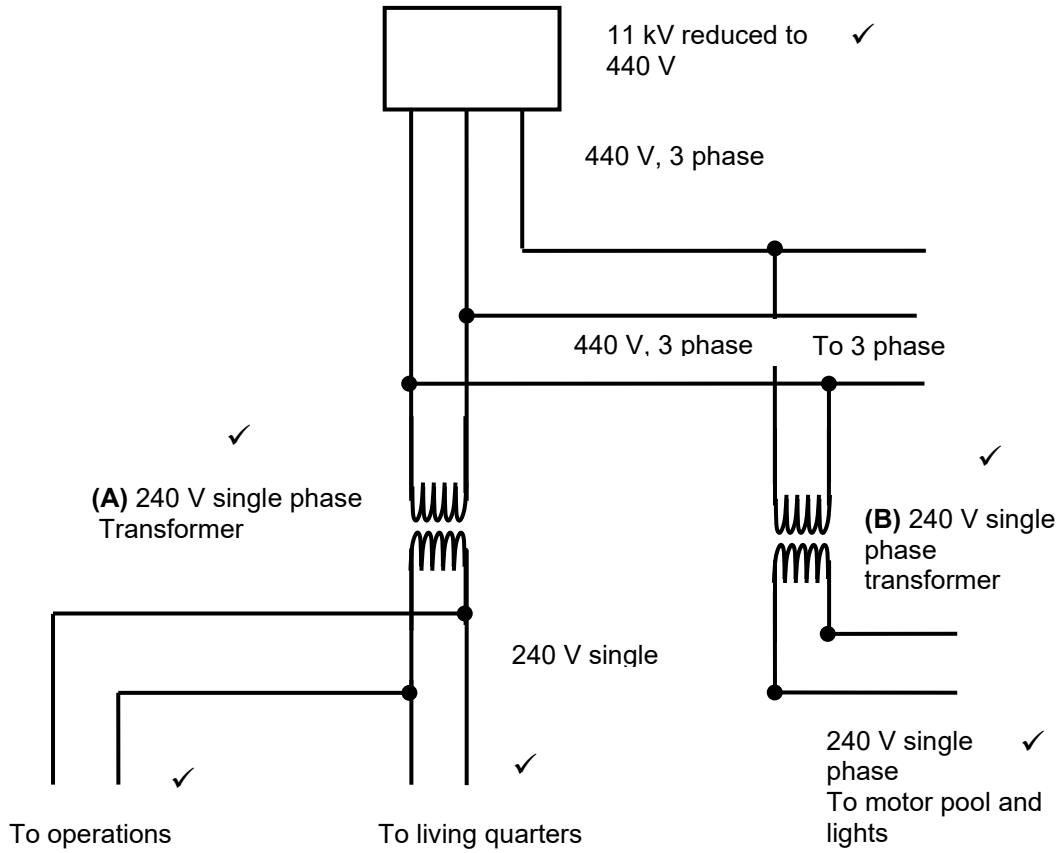

(7)

4.2
- Switchyards.
- Conduits, wireways and cable furrows.
- Distribution boards.
- Points of delivery.
- Circuit protection devices.
- Various sub-circuits within the building.

(Any 3 x 1) (3)

4.3 4.3.1 True

4.3.2 False

4.3.3 False

4.3.4 False

4.3.5 True

(5 x 1) (5)

4.4 4.4.1 Hipot tester is used to test cables rated 5 kV and higher.

4.4.2 LCR meter is used to test the inductance, capacitance and resistance of components and circuits.

4.4.3 Earth ground tester is used to measure the resistance of the earth electrode.

4.4.4 Multimeter is used in continuity testing to test volts AC/DC, amps and resistance.

4.4.5 Phase rotation meter is used to test the rotational phase by comparing two different three-phase connections.

(5 x 1) (5)
[20]

QUESTION 5

5.1
- Always use the proper PPE.
- Obtain any necessary permits or approvals for the work.
- Remove electrical power, de-energise and isolate where necessary.
- Practise locking and tagging of circuit breakers and equipment.
- Make sure the circuit is open when removing a fuse.
- Make sure that any metallic or conductive parts around the device, such as pipes, conduits and boxes, are earthed.
- Never handle the equipment or the circuit with wet hands or while standing on a wet floor.
- Use equipment and parts according to the relevant rules and regulations.
- When working with high-voltage equipment, assess the risks involved and prepare the relevant controls before use.

(Any 3 x 1) (3)

5.2
- Divide and conquer.
- Fault indicators.
- Thumper test.
- Burner technique.
- Earth gradient detection procedure.
- Time domain reflectometry.

(Any 3 x 1) (3)

5.3
- Imbalance power supply (unequal transformer tap settings).
- Imbalanced system loading.
- High resistance connection.
- Power line for one or two phases undersized.
- Improper functioning of capacitor bank.
- Defective motor.

Copyright reserved

(Any 3 x 1) (3)

5.4 5.4.1 Look for obvious things before you carry out complex tests and repairs, or diagnose complex faults.

5.4.3 Remove the device you suspect to be the problem from the system, and test it on its own.

(2 x 2) (4)

5.5
- A lack of oil in the transformer.
- A faulty Buchholz relay.
- A breakdown of the insulating material.

(Any 2 x 1) (2)

[15]

QUESTION 6

6.1 6.1.1 Batteries store electricity for when the generator is not supplying sufficient power, ✓ for example when there is no wind or the sun is not shining. ✓

6.1.2 Charge controllers regulate the flow of electricity from a wind turbine to the battery and any DC loads. ✓ They prevent the battery from over-charging, by stopping or limiting the flow of electricity into the battery. ✓

(2 x 2) (4)

6.2 $$Number\ of\ days = \frac{Total\ Hours}{24}$$

$$Number\ of\ days = \frac{622}{24} \quad ✓$$

$$= 26\ days \quad ✓$$

$$E_{min} = \frac{E_{daily} \times days}{BDD}$$

$$E_{min} = \frac{4 \times 26}{0{,}75} \quad ✓✓$$

$$E_{min} = 139\ kWh \quad ✓$$

$$Ah = \frac{E_{min}}{Battery\ Voltage}$$

$$Ah = \frac{139}{12} \quad ✓$$

(7)

$Ah = 11{,}58\ Ah$

6.3 The number of days without sunshine✓ during which clients want to be able to operate all their appliances.✓ (2)

6.4
- The voltage drop over a cable should be less than 10% of the supply voltage for non-critical applications such as lighting and appliances, and less than 3% for critical applications such as electronics and main feeders to panels.✓
- The voltage should not drop below the voltage required by the appliance.

(2 x 1) (2)
[15]

TOTAL: 100