higher education & training

Department:
Higher Education and Training
REPUBLIC OF SOUTH AFRICA

NATIONAL CERTIFICATE (VOCATIONAL)

CARPENTRY AND ROOF WORK
NQF LEVEL 4

(12030504)

17 November 2022 (X-paper)
09:00–12:00

This question paper consists of 6 pages.

431Q1N2217

Copyright reserved

TIME: 3 HOURS
MARKS: 100

INSTRUCTIONS AND INFORMATION

1. Read all the questions carefully.
2. Answer all the questions.
3. Number the answers according to the numbering system used in this question paper.
4. Write neatly and legibly.

Copyright reserved

QUESTION 1

1.1 Indicate whether the following statements are TRUE or FALSE by writing 'True' or 'False' next to the question number (1.1.1–1.1.5) in the ANSWER BOOK. Correct the statement if it is FALSE.

1.1.1 A geyser that is installed outside the roof structure doesn't need a drip tray because when it bursts the water will not damage the inside of the house.

1.1.2 The installation of geysers close to the kitchen and bathrooms will reduce the installation cost but it can have an influence on the accessibility due to the slope of the roof.

1.1.3 A carpenter needs a signed off design by an engineer for all geyser support decks when the geyser capacity is larger than 200 ℓ and a roof truss design of 7 m and smaller.

1.1.4 SANS 10400 state that the first strut or web member of a roof truss, next to the king post, can be removed if the overlap of the additional geyser support is more than 280 mm.

1.1.5 It is recommended that a geyser support deck for 250 ℓ geysers must rest on the internal walls of a building in order to reduce the downward forces on the roof structure.

(9)

1.2 Give TWO disadvantages when installing a geyser outside of the roof structure. (2)

1.3 Make a neat, labelled drawing of a *fink roof truss* with a geyser in position, that will show the extra member fixed to the tie beam in order to strengthen the tie beam. The following details must be clearly shown:

1.3.1 The fixing method used for attaching the additional member

1.3.2 The distance the additional member projects past the truss nodes

(2 × 2) (4)

[15]

QUESTION 2

2.1 State THREE benefits when installing ceilings in a residential house. (3)

2.2 Explain the procedures that you will follow to install the first *tongue and groove* board with the installation of *tongue and groove* ceilings. (10)

2.3 Define the term *cross brandering,* and explain why it is seldom used in modern-day ceiling installation. (4)

2.4 Give the sizes of the brandering (width and thickness) and the size of the nails that you will use to fix each of these branderings for ceilings with the following roof covering:

2.4.1 Cement tiles

2.4.2 Corrugated iron sheets

(2 × 2) (4)

2.5 Make a neat sketch that will clearly show the fixing method used to fix the FIRST BOARD of a knotty-pine tongue and groove ceiling to the tie beam of a roof structure. (5)

2.6 Explain why less material is used for installing a trapdoor in a tiled roof structure than in a roof covered with corrugated iron sheets. (4)

[30]

QUESTION 3

3.1 FIGURE 1 below shows a cross sectional view of a tongue and groove bord that must be used for the installation of a suspended timber floor. The length of ONE floorboard is 1,8 m and must be installed in a room that is 5,4 m long and 3,36 m wide. The floor joist (spaced 415 mm apart) with a maximum length of 3,36 m, rest on TWO sole plates of 5,4 m long. The floor joists are supported in the middle with a 110 mm sleeper wall.

Answer the following questions next to the question number (3.1.1-3.1.4) in the ANSWER BOOK.

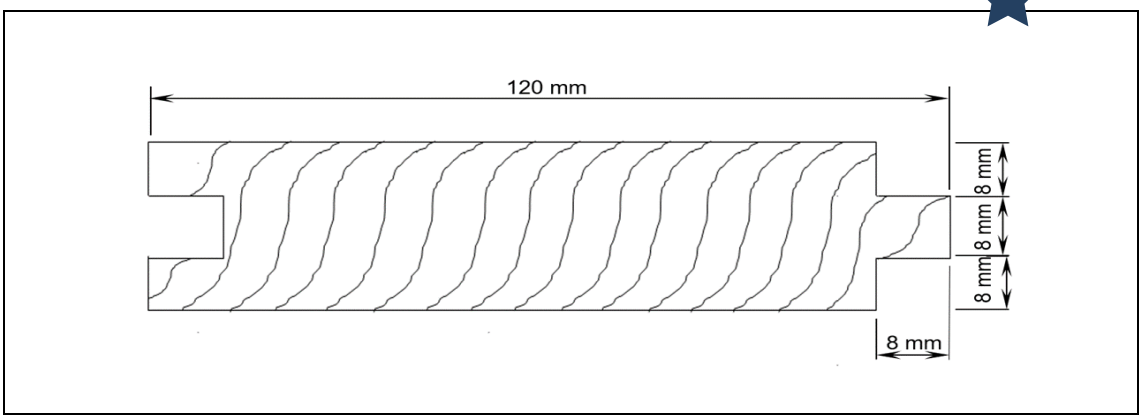

FIGURE 1

3.1.1 Calculate the amount of floor boards that you will need to cover the entire floor area. (5)

3.1.2 Determine how many floor joists will be needed if the span of ONE floor joist is 3,36 m. (2)

3.1.3 State the minimum bearing length and clearance for a floor joist that is built into masonry walls. (2)

3.1.4 Illustrate by means of a neat labelled drawing a vertical section of the sleeper wall for the suspended floor as described. The floor boards must be at a minimum hight of 550 mm measured from the top of the foundation.

The drawing must include the following detail:

- Foundation
- Sleeper wall
- Sole plate
- Floor boards
- Floor joists
- Damp proof coarse
- Ant guards (5)

3.2 Make a neat labelled drawing showing a sleeper beam fixed to a nine-course sleeper pier on a foundation footing. (6)

[20]

QUESTION 4

4.1 Choose the correct term from those in brackets. Write only the answer next to the question number (4.1.1–4.1.5) in the ANSWER BOOK.

4.1.1 A carpenter will need (2/4/6) brass hinges to hang a stable door.

4.1.2 The door leading from a narrow passage should (open outward from/open into) the adjoining room.

4.1.3 Mortise and tenon joints are used in the construction of (flush doors/panel doors).

4.1.4 Glass panels are normally fitted to the door (before/after) it is hung.

4.1.5 A door that is out of plumb is not perpendicular with the (wall/floor) and will lean either towards or away from you.

(5 × 1) (5)

4.2 Explain the term *misaligned jambs*. (2)

4.3 State the SIX processes generally applied to hang a flush door. (6)

4.4 Name any FIVE hand tools used for fitting a mortise lock and handles. (5)

4.5 Explain the function of the following items of door furniture commonly used on the entrance door of a home:

4.5.1 A weather strip

4.5.2 A cabin hook

(2 × 1) (2)

[20]

QUESTION 5

5.1 Give any TWO disadvantages when using chipboard when installing cupboards. (2)

5.2 Describe the procedures that you will follow to fix pre-manufactured cupboards to a wall with nail anchors. (5)

5.3 Explain the purpose of the concave recess (broad, shallow groove) cut into the back of skirting boards. (2)

5.4 Explain the procedures that you will follow to install open chipboard shelving between two halls, supported by timber cleats. (6)

[15]

TOTAL: 100

Copyright reserved