higher education & training

Department:
Higher Education and Training
REPUBLIC OF SOUTH AFRICA

NATIONAL CERTIFICATE (VOCATIONAL)

AUTOMOTIVE REPAIR AND MAINTENANCE
NQF LEVEL 4

(6021034)

17 November 2022 (X-paper)
09:00–12:00

This question paper consists of 7 pages.

427Q1N2217

Copyright reserved

TIME: 3 HOURS
MARKS: 100

INSTRUCTIONS AND INFORMATION

1. Answer all the questions.
2. Read all the questions carefully.
3. Number the answers according to the numbering system used in this question paper.
4. Use only a black or blue pen.
5. The drawing must be neat, in good proportion and may be done in pencil.
6. Write neatly and legibly.

Copyright reserved

QUESTION 1

Various options are given as possible answers to the following questions. Choose the answer and write only the letter (A–D) next to the question number (1.1–1.10) in the ANSWER BOOK.

1.1 … is an advantage of increasing the engine compression ratio.

A Increased bearing pressure
B Better economy
C Special fuels are needed
D A better cooling system is needed

1.2 … does not have an influence on the compression pressure.

A Volumetric efficiency
B The mechanical condition
C The crank rotation speed
D The compression ratio

1.3 Which of the following is not part of automatic transmission?

A Epicyclic gear-set
B Torque convertor
C Multi-plate clutch
D Sliding mesh gearbox

1.4 The … is NOT a component of the differential assembly.

A cross-shaft
B side gear
C lock pin
D pinion gear

1.5 … is NOT a pre-check for a reduction-type differential.

A Crown wheel run-out
B Total bearing pre-load
C Shim thickness
D Tooth contact

1.6 … fuel injection is NOT a type or component of fuel injection.

A Air-box line
B Throttle body
C Port injection
D Indirect

Copyright reserved

1.7 Which component in the diesel fuel system regulates the quantity of fuel injected?

A Plunger
B Control sleeve
C Injector
D Control rack

1.8 NOT an advantage of the power steering system:

A Lessens kickback at the steering
B Light steering at high speed
C Better resistance of any sudden swerving
D Heavier loads on the steered wheels

1.9 A general inspection of the electrical connections include checking for …

A Fuel pressure loss
B Braking pressure loss
C Poor acceleration
D Kinking in harnesses

1.10 … has NO influence on the operational and service safety of air conditioners.

A The heat of the service can
B The discharging of the gas
C Ambient pressure outside
D Spillage of refrigerant

(10 × 1) **[10]**

QUESTION 2

Indicate whether the following statements are TRUE or FALSE by writing only 'True' or 'False' next to the question number (2.1–2.5) in the ANSWER BOOK.

2.1 Tyre tread minimises hydro-planing in wet weather.

2.2 When a vehicle is in an accident, the damage is proportional to the relative velocity of the vehicle.

2.3 A conventional electromotor/generator unit consists of the parts: MG1, MG2 and MG3

2.4 A vehicle operating at a higher altitude has higher amounts of power due to the altitude.

2.5 The valve body of an automatic transmission, controls the lubrication pressure of the torque convertor.

(5 × 1) **[5]**

Copyright reserved

QUESTION 3

Choose a description from COLUMN B that matches an item in COLUMN A. Write only the letter (A–M) next to the question number (3.1–3.10) in the ANSWER BOOK.

COLUMN A		COLUMN B	
3.1	Side bearing adjusting tool	A	build-up of heat in the system
3.2	Helical drive gear, low speed	B	passenger airbag deactivation
3.3	Dropping resistors	C	reduction differential
3.4	High fuel pressure	D	diesel fuel could puncture your skin
3.5	Black hydraulic oil	E	differential
3.6	Lab scope/oscilloscope	F	hydraulic-assisted power steering
3.7	Noise from condenser	G	measures different waveforms
3.8	Trigger wheel/rotor	H	engine noisy and smoking
3.9	SRS equipped with PAD	I	the magnetic sensor produces a weak AC signal for the ECU
3.10	Insulated gloves	J	appropriate electric vehicle safety
		K	cold starting
		L	supply voltage at injectors, 5,5 V
		M	mounting stay resonating with the body

(10 × 1) **[10]**

QUESTION 4

4.1 Name THREE mounting configurations of in-line engines in use in modern vehicles. (3)

4.2 Make a neat, labelled freehand drawing to show the construction of the inertia vibration damper. (4)

4.3 State EIGHT steps in the correct sequence, that should be followed when servicing an automatic-transmission gearbox. (8)

4.4 Name THREE types of tooth contact sections that are used when adjusting a final drive. (3)

[18]

QUESTION 5

5.1 State the visual inspections, conditions and regulations that must be done on the gears of a double-reduction differential. (3)

5.2 State SIX safety procedures that must be followed when working on an electronic ignition system. (6)

5.3 Name TWO things that are checked by a visual inspection when inspecting the wires of a vehicle. (2)

5.4 The sketch below shows a screw-type fuel injector. Name the parts indicated by writing only the answer next to the number (1–9) in the ANSWER BOOK.

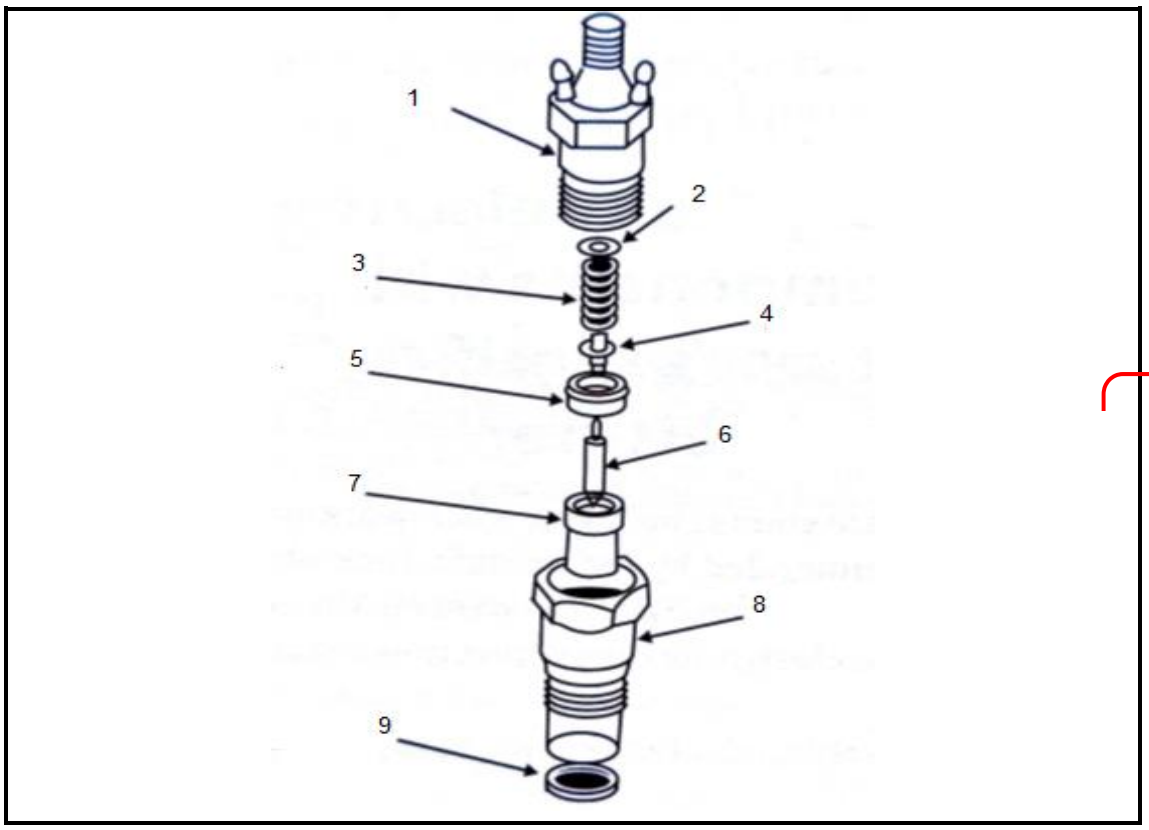

(9)

5.5 Special care should be taken when repairing defective steering systems.

Draft a care list that technicians can follow to avoid possible pitfalls. (8)

[28]

QUESTION 6

6.1 Fully explain what is meant by an advanced electronic system? (3)

6.2 State FIVE advantages of using advanced electronic systems. (5)

6.3 Give a step-by-step explanation of how to connect a pressure gauge manifold and gas cylinder to an air-conditioning system. (8)

6.4 Describe the braking and acceleration control on:

6.4.1 Low-traction surfaces

6.4.2 High-traction surfaces

(2 × 4) (8)

6.5 The sketch below shows an SRS system. Name the parts indicated by writing only the answer next to the number (1–5) in the ANSWER BOOK.

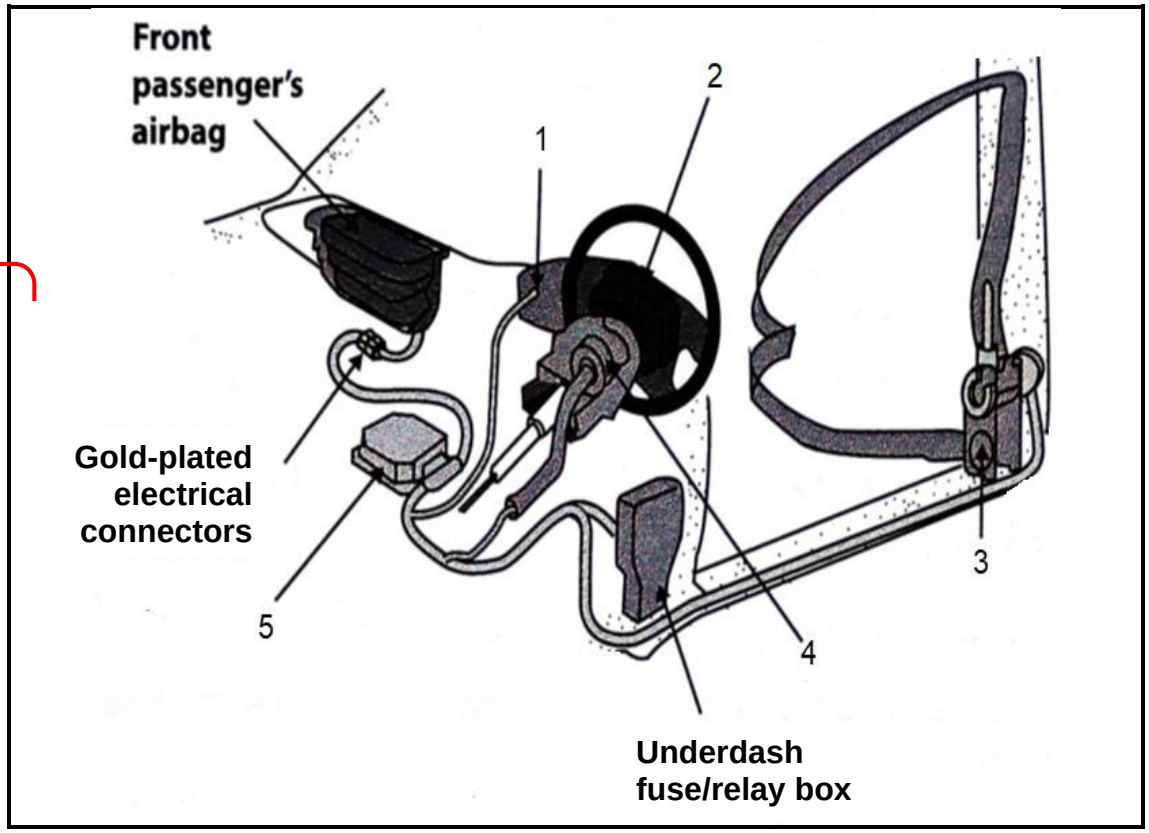

(5)
[29]

TOTAL: 100

Copyright reserved