higher education & training

Department:
Higher Education and Training
REPUBLIC OF SOUTH AFRICA

MARKING GUIDELINE

NATIONAL CERTIFICATE (VOCATIONAL)

AUTOMOTIVE REPAIR AND MAINTENANCE
NQF LEVEL 4

17 November 2022

This marking guideline consists of 6 pages.

Copyright reserved

QUESTION 1

1.1 B
1.2 C
1.3 D
1.4 D
1.5 C
1.6 A
1.7 D
1.8 B
1.9 D
1.10 C

(10 × 1) **[10]**

QUESTION 2

2.1 True
2.2 True
2.3 False
2.4 False
2.5 False

(5 × 1) **[5]**

QUESTION 3

3.1 E
3.2 C
3.3 L
3.4 D
3.5 A
3.6 G
3.7 M
3.8 I
3.9 B
3.10 J

(10 × 1) **[10]**

Copyright reserved

QUESTION 4

4.1
- Vertical
- Horizontal
- Tilted slightly (3)

4.2

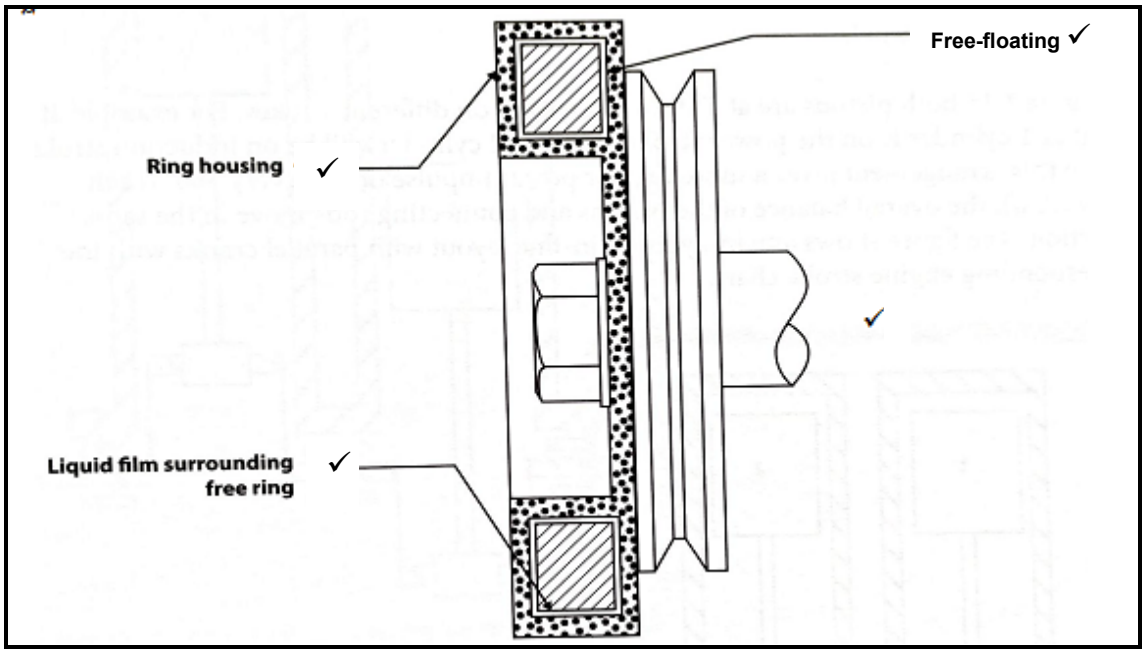

(Use own discretion - all requirements must be met for full mark allocation.)
(ONE mark for the drawing) (4)

4.3
- Road-test the vehicle to test transmission performance.
- Drain the transmission fluid .
- Remove and clean the oil pan.
- Inspect the fluid condition.
- Remove and replace the transmission filter.
- Check and adjust bands and controls if required.
- Refit the oil pan with a new gasket.
- Fill the transmission with the correct new oil.
- Start the engine and check the transmission oil level.
- Road-test the vehicle to test transmission performance.
- Recheck the transmission for any oil leaks.(Any EIGHT steps in sequence) (8)

4.4
- Toe contact
- Heel contact
- Face contact
- Flank contact
- Correct contact
- Drive side
- Coast side (Any 3 × 1) (3)

[18]

QUESTION 5

5.1
- Inspect the first reduction hypoid and second reduction gears for wear and damage.
- Gears which are scored, pitted, ridged or worn should be replaced.
- The gears are replaced as a set and cannot be replaced individually. (3)

5.2
- Wear PPE.
- Do not disconnect an ECU harness with the ignition ON.
- When measuring voltage or resistance in an electronic ignition system, always use a high-impendence meter or a digital meter.
- Do not use sharp objects to pry components from one another.
- Wear additional safety protection when dismantling components to prevent shock.
- Secure components properly when dismantling to avoid injuries.

(Any appropriate answers) (6 × 1) (6)

5.3
- Loose wire connections
- Wiring that is shaven or damaged
- Insulation that is hard and cracked
- Broken connectors
- Wires pinched between components

(Any TWO appropriate answers) (2 × 1) (2)

5.4
1. Injector upper body
2. Pressure-adjusting shim
3. Spring
4. Thrust pin
5. Spacer
6. Needle valve
7. Nozzle
8. Lower body
9. Heat shield (9)

5.5
- Clean the steering gear before doing any repairs.
- Never adjust steering gear while either shaft is connected to the linkage.
- Never rebuild a steering gear that has been involved in an accident.
- Always use the correct fluid as prescribed by the manufacturer.
- Always flow test the system before installation.
- Change the filters once the repair is done.
- Always use the correct tools as per the repair manual.
- Use soft blow hammers not to damage cylinder shafts.

(Any appropriate answers) (8 × 1) (8)

[28]

QUESTION 6

6.1 It is a system that uses basic electronics✓ but more advanced and/or complex circuits✓ with modern components✓ (3)

6.2
- They can work in vibrating conditions.
- They are smaller than previous units.
- They are more accurate than basic systems.
- Components are multifunctional.
- They are more reliable.
- They are not affected by harsh weather conditions. (Any relevant 5 × 1) (5)

6.3
- With all the valves closed, connect the centre hose to the refrigerant container.
- Open the centre valve of the manifold gauge set and the service valve on the refrigerant container.
- Leave the gauge discharge valve closed on the high-pressure side.
- Open the suction valve on the low-pressure side.
- Start the engine and turn the air-conditioning system on.
- Check that the compressor suction draws the refrigerant into the system by checking the tank weight on the scale.
- Adjust the suction line valve so that the gauge pressure does not exceed 345 kPa to prevent compressor damage.
- When the system is fully charged, double check the system pressures and temperatures.
- Perform a quick leakage test on the charging valves after disconnection.

(Any appropriate EIGHT steps) (8 × 1) (8)

6.4 6.4.1
- The vehicle's driving wheels will tend to spin on pull-off and acceleration.
- The computerised TCS will eliminate this as soon as it detects the wheels are starting to spin
- by applying brakes to the driving wheels.
- When braking on low-traction surfaces the ABS will be activated to prevent wheels from locking. (4)

6.4.2
- On acceleration the wheels will grip well and no action will be taken.
- The TCS will only monitor the situation and not respond.
- When braking, the ABS will monitor the situation
- Only in case of a wheel slipping the ABS will be activated. (4)

6.5
1. SRS indicator light
2. Driver airbag/Steering airbag
3. Driver front seatbelt tensioner
4. Cable reel
5. SRS and G-sensor unit (5)

[29]

TOTAL: 100

Copyright reserved