higher education & training

Department:
Higher Education and Training
REPUBLIC OF SOUTH AFRICA

NATIONAL CERTIFICATE (VOCATIONAL)

PROCESS CHEMISTRY
NQF LEVEL 3

(6050433)

8 November 2022 (X-paper)
09:00–12:00

This question paper consists of 5 pages and a periodic table.

Copyright reserved

TIME: 3 HOURS
MARKS: 100

INSTRUCTIONS AND INFORMATION

1. Answer all the questions.
2. Read all the questions carefully.
3. Number the answers according to the numbering system used in this question paper.
4. Start each section on a new page.
5. Use only a black or blue pen.
6. Write neatly and legibly.

Copyright reserved

QUESTION 1: FERTILISERS

1.1 Indicate whether the following statements are TRUE or FALSE by writing only 'True' or 'False' next to the question number (1.1.1–1.1.5) in the ANSWER BOOK.

1.1.1 Fertilisers are substances that take nutrients from plants.

1.1.2 Nitrates are inorganic compounds that contain only nitrogen and oxygen atoms.

1.1.3 Photosynthesis is a process during which carbon dioxide and sunlight are converted into oxygen and sugar.

1.1.4 Foliar fertilisers are fertilisers that are applied directly to plant leaves.

1.1.5 Macronutrients are nutrients that include nickel, phosphorus and krypton.

(5 × 1) (5)

1.2 Give FIVE disadvantages of inorganic fertilisers. (5)

1.3 Give the chemical formula of the following compounds:

1.3.1 Epsom salt

1.3.2 Ammonium sulphate

1.3.3 Urea

(3 × 2) (6)

1.4 What is the macronutrient whose deficiency causes leaf scorch? (1)

1.5 Why is pure apatite not useful as a fertiliser by itself? (2)

1.6 Given below is a typical nitric acid production process:

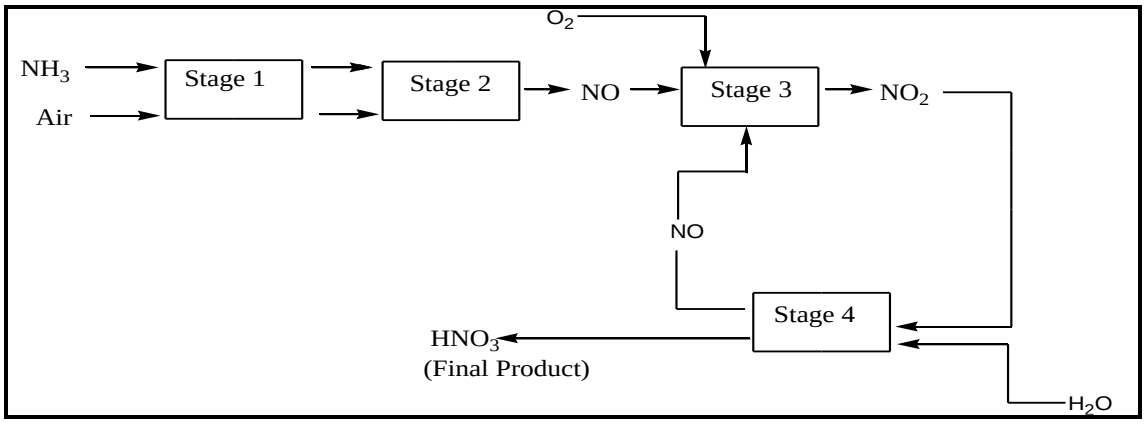

1.6.1 Name the FOUR stages involved in the production of nitric acid. (4)

1.6.2 Write a balanced chemical equation for the reaction of ammonia with oxygen in Stage 2. (4)

1.6.3 Name the by-product produced in Stage 4. (1)

[28]

QUESTION 2: CEMENT, CALCIUM AND SODIUM COMPOUNDS

2.1 List THREE properties of cement that makes it a versatile building material. (3)

2.2 List FIVE main manufacturers of cement in South Africa. (5)

2.3 Draw a process flow diagram for the production of cement. (7)

2.4 Why is limestone considered the most important raw material used in the production of cement? (2)

2.5 List FIVE stages in sequence that are involved in the cement production process. (5)

2.6 Give the chemical formula and TWO uses of the following calcium compounds:

2.6.1 Calcium carbonate

2.6.2 Calcium oxide

2.6.3 Hydrous calcium sulphate (gypsum)

(3 × 3) (9)

2.7 What is the most common sodium compound that is formed naturally? (1)

[32]

QUESTION 3: SOAP, DETERGENTS AND PESTICIDES

3.1 Name THREE products that are produced by Unilever. (3)

3.2 Classify the following compounds as hydrophobic or hydrophilic. Substantiate your answer.

3.2.1 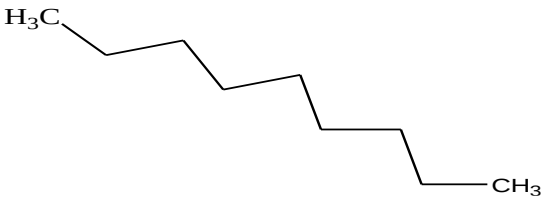

3.2.2 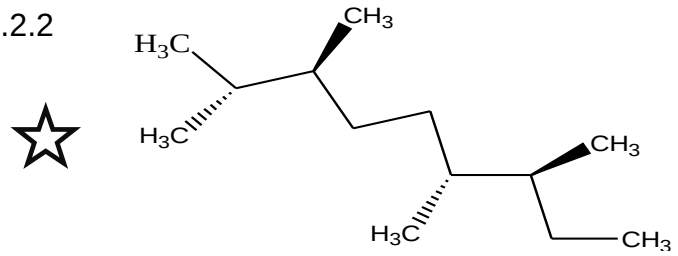

3.2.3 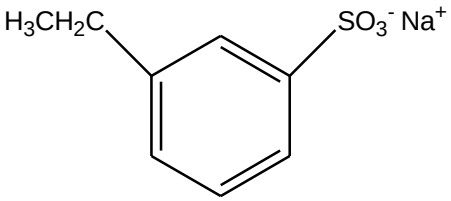

(3 × 2) (6)

3.3 Explain why cationic and anionic hydrophiles cannot be used together in a detergent. (2)

3.4 Name FOUR steps involved in a kettle process for the production of soap. (4)

3.5 Name THREE categories of pesticides. (3)

3.6 Differentiate between *selective* and *non-selective* herbicides. (2)
[20]

QUESTION 4: PULP AND PAPER

4.1 Distinguish between *virgin fibre* and *secondary fibre*. (2)

4.2 Name TWO methods that are used to produce pulp. (2)

4.3 Name THREE methods of drying. (3)

4.4 The paper finishing process is performed to improve the quality of paper.

4.4.1 Discuss the TWO most important winding processes. (4)

4.4.2 List FOUR paper finishing operations. (4)

4.4.3 Give FIVE examples of coated paper. (5)
[20]

TOTAL: 100

Copyright reserved

THE PERIODIC TABLE OF ELEMENTS
DIE PERIODIEKE TABEL VAN ELEMENTE

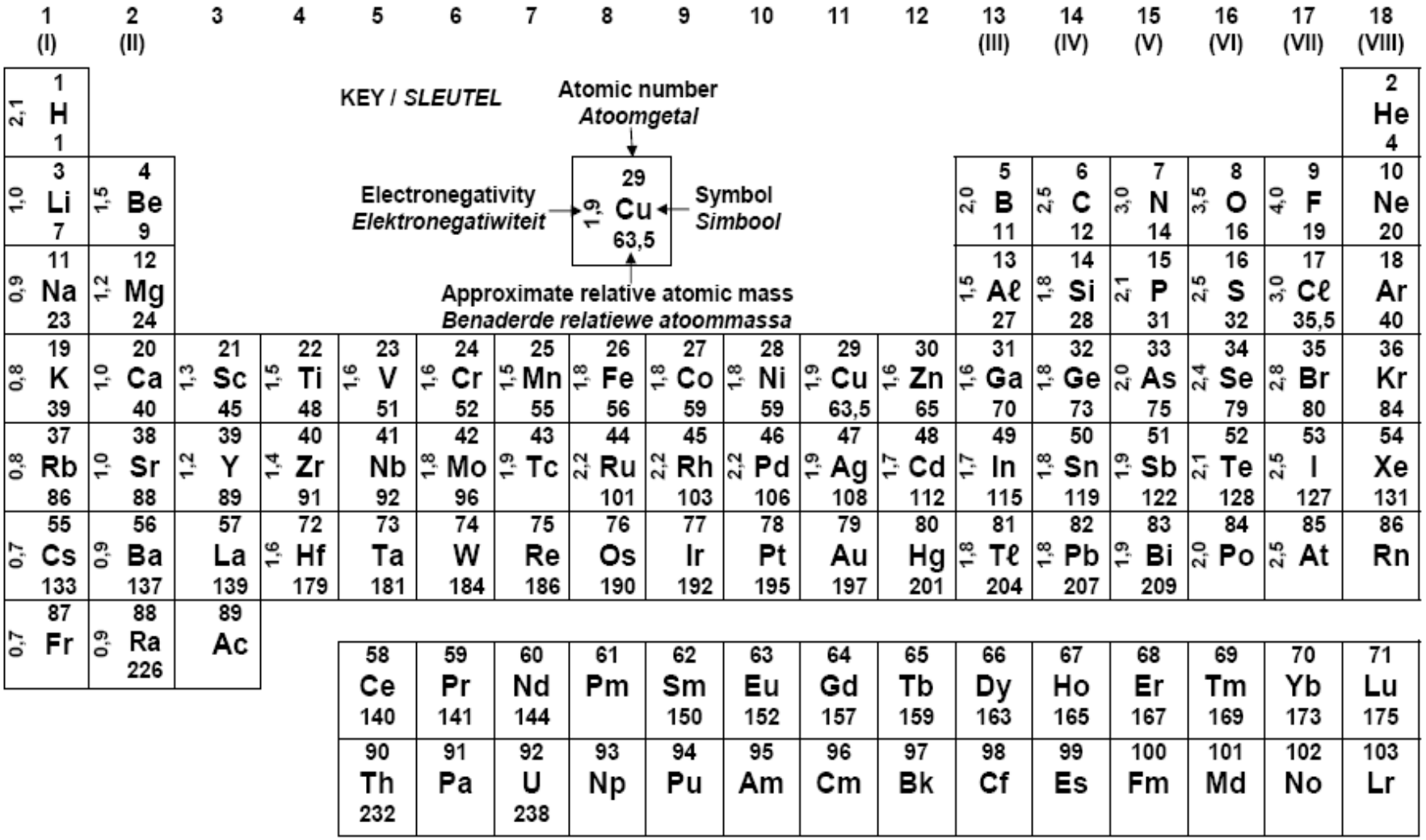

(6050433)

Copyright reserved