higher education & training

Department:
Higher Education and Training
REPUBLIC OF SOUTH AFRICA

MARKING GUIDELINE

NATIONAL CERTIFICATE (VOCATIONAL)

MECHATRONIC SYSTEMS
NQF LEVEL 3

16 November 2022

This marking guideline consists of 6 pages.

Copyright reserved

QUESTION 1

1.1 1.1.1

- Used in a computer to convert the analogue signals to digital signals
- Used together with transducers
- Cell phones
- Microcontrollers
- Scientific instruments
- Music reproduction technology
- Digital signal processing
- Audio/Video devices
- Digital multi-meters
- PLC's (Programmable Logic Controllers)
- RADAR processing, digital oscilloscopes
- CMOS Image sensors for mobile applications
- Medical Instrumentation and medical imaging (Any 5 × 1) (5)

1.1.2 ADCs and DACs are very important components, since most real-world signals are analogue,✓ these two converting interfaces are necessary✓ to allow digital electronic equipment to process the analog signals.✓ (3)

1.2

- High resistance change
- Small in size so they can fit into the smallest of spaces
- They are more sensitive than other temperature sensors
- High sensitivity allows them to work well over a small temperature range
- They are low cost and therefore cheap to replace.
- They provide a fast response
- Easy to use
- Options for customisation
- Standard two-wire connection system means they are compatible with many devices
- Easily interfaced to electronic instrumentation (Any 6 × 1) (6)

1.3 Half wave phase control is when only the top or bottom half✓ of the input sine wave is used✓ whereas in full wave phase control both halves✓ of the input sine wave.✓ (4)

1.4 A capacitor stores and releases electric charge in a circuit✓ and it also passes alternating current while blocking direct current.✓ (2)

[20]

QUESTION 2

2.1 2.1.1 An electro-magnet can only have magnetic fields when an electric current flows through it✓ and disappears when the flow of the current stops✓ whereas permanent magnets are made up of magnetic material that is magnetised✓ and has its own magnetic fields.✓ It will always display the magnetic behaviour.✓

OR

The difference between permanent magnet and electromagnet is in their strengths and fields.✓ The magnetic field of a permanent magnet is always constant,✓ but the electromagnetic magnetic field is created✓ by establishing an electric current✓ and ended by removing the current.✓

OR

The difference in strength between the two is due to the type of magnetisation.✓ That is, if the magnetic property of the permanent magnet is greater,✓ the magnet is stronger.✓
But in the case of the electromagnet, the strength depends on the electric current.✓✓ (5)

2.1.2

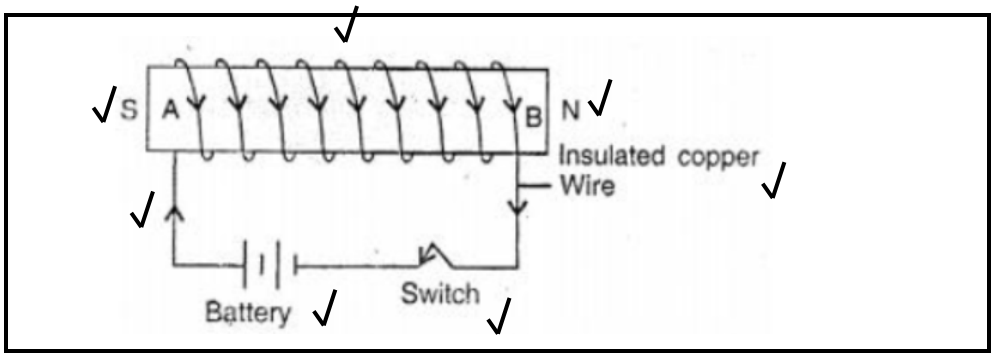

(7)

2.1.3 The direction of the current will change ✓ causing direction of the magnetic field to change.✓ (2)

2.2
- The stepper motor operates in open loop✓ whereas a direct current (DC) motor operates in closed loop.✓
- Stepper motors are easy to control with the help of microprocessors and other controlling devices.✓ Control of a DC motor is not easy.✓
- The stepper motor is a brushless motor,✓ but the direct current motor contains brushes which cause problems such as wear and tear, and sparks.✓
- The motion of the stepper motor is incremental, and resolution is limited to the size of the step.✓ DC motor has a continuous displacement and can be controlled accurately and positioned exactly.✓
- Feedback control with DC motor gives a much faster response time✓ as compared to that of the stepper motor.✓
- The stepper motor can be slipped and gets out of control if overloaded and the error cannot be detected easily,✓ whereas in DC motor the relays and overload protecting devices come into action at the time of overloading and protects the motor from any damage.✓ (Any 4 × 2) (8)

[22]

QUESTION 3

3.1 A hydraulic filter is a component used to continuously remove contaminants in the oil.✓ This process will purify the fluid and protect the system from damages created by the particle contents.✓ (2)

3.2 3.2.1 The air filter is the breathing system of hydraulic applications during operation,✓ that draws air inwards and expel outwards.✓

3.2.2 The suction filter functions as a hydraulic oil purifying component✓ that is placed before the hydraulic pump.✓

3.2.3 Pressure filters are placed after the hydraulic pump✓ and are used to handle the system pressure and flow rate.✓

3.2.4 A return filter purifies the hydraulic fluid✓ before returning it to the reservoir.✓

3.2.5 Off-line filters are small, independent sub-systems consisting of a filter, pump,✓ electrical motor and hardware connections.✓

(5 × 2) (10)

3.3 The P represent the high-pressure input from the power pack,✓ and T represent low-pressure return to the tank.✓ (2)

3.4

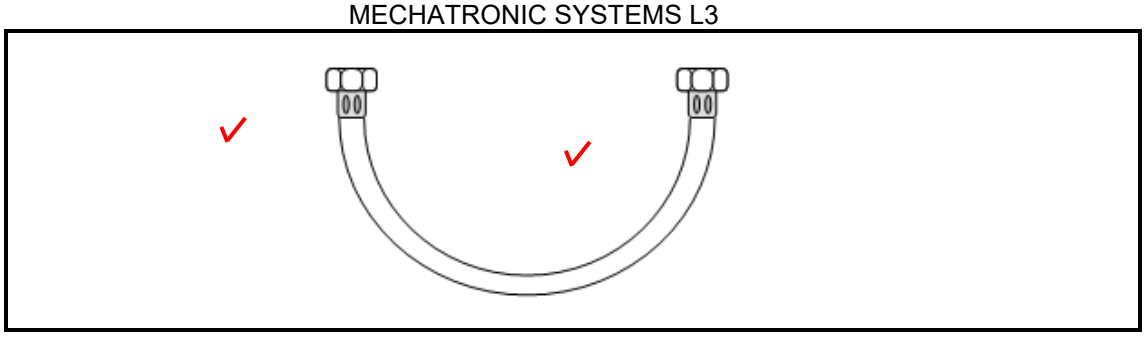

(2)

3.5 Contamination of the fluid may result in wear, corrosion, and poor performance,✓ resulting in the failure of the equipment.✓ (2)
[18]

QUESTION 4

4.1 When the main switch in line1 is activated, the current will flow from 24 V through the coil K1 and the lamp in line 2 to reach 0 V.✓
This will cause the coil K1 to energise and the lamp in line 2 to turn on.✓
The normally open contact K1 in line 3 will close, allowing the current to flow from 24 V, through the E/STOP closed contact, through line 3 to reach 0 V.✓
The E/S1 coil will energise.✓
The normally open contact E/S1 in line 4 will close.✓
When the MACH1 detent switch in line 4 is activated, current will flow from 24V through the K2 coil in line 4 to reach 0 V.✓
The K2 coil will energise.✓
The normally open contact K2 in line 6 will close.✓
The selector switch S1 in line 6 when switched to MAN position in line 5 will cause the MAN coil to energise.✓
When S1 is switched to AUTO position, the auto coil in line 7 will energise.✓
When the E/STOP in line 3 is activated, it will cut the supply to the E/S1 coil in line 3 causing it to de-energise.✓
The closed E/S1 contact in line 4 will open, causing the circuits from line 4–7 to de-energise.✓ (12)

4.2 When the coil is activated, the fluid flow is from pressure (P)✓ to working port (A)✓ and from working port (B)✓ to tank (T).✓ (4)

4.3 It is an electrically operated valve that controls how hydraulic fluid is sent to an actuator,✓ which provides precise control of position, velocity, pressure, and force✓✓ with good post-movement damping characteristics.✓ (4)
[20]

QUESTION 5

5.1 Logical fault finding refers to a systematic approach to analysing the malfunction,✓ asking the relevant questions, and then making an informed decision on where the possible fault could be,✓ and then performing the troubleshooting procedures in a logical manner.✓ (3)

5.2
- Check that all pipes and hose connections are tight
- Confirm that reservoir fluid levels are above the minimum level
- Ensure that all controls are in their normal position
- When the prime mover is an electrical component, confirm the direction of rotation
- Start the prime mover at the lowest possible speed
- Operate the system without the load
- Adjust and check the system operating pressure when at operating temperature
- Test the system under load
- Check the system for leaks
- Put the system back into service (Any 5 × 1) (5)

5.3
- Cavitation caused by air entering the pump inlet.
- Dirty inlet suction strainer.
- Loose connection on suction line or suction strainer.
- Low hydraulic fluid level.
- Excessive pump speed.
- Oil is foaming.
- Very large volume actuator causing periodic low levels in tank.
- Clogged reservoir air breather vent causing vacuum in tank.
- Excessive oil viscosity causing cavitation
- Temperature is too low for the oil in the system.
- Damaged or Worn Pump.
- Misalignment of Pump and Motor.
- Pump and/or Motor Mounts worn or loose.
- Relief Valve Chattering.
- Relief Valve Operating Continuously (Any 5 × 1) (5)

5.4 Continuous monitoring refers to monitoring the pressure✓ and flow at various stages✓ using flowmeters at key points.✓ (3 x 1) (3)

5.5
- The oil level in the tank
- Pressure
- Power to the hydraulic pack
- Check if valves are open/operating (4)

[20]

TOTAL: 100

Copyright reserved