higher education & training

Department:
Higher Education and Training
REPUBLIC OF SOUTH AFRICA

NATIONAL CERTIFICATE (VOCATIONAL)

MATHEMATICS
NQF LEVEL 3
(Second paper)

(10501053)

15 November 2023
09:00–12:00

Non-programmable calculators may be used.

This question paper consists of 9 pages, a formula sheet of 2 pages and an answer sheet of 2 pages.

047Q2N2315

Copyright reserved

DEPARTMENT OF HIGHER EDUCATION AND TRAINING
REPUBLIC OF SOUTH AFRICA

NATIONAL CERTIFICATE (VOCATIONAL)
MATHEMATICS
NQF LEVEL 3
(Second paper)
TIME: 3 HOURS
MARKS: 100

INSTRUCTIONS AND INFORMATION

1. Answer all the questions.
2. Read all the questions carefully.
3. Number the answers according to the numbering system used in this question paper.
4. Clearly show all calculations, diagrams, graphs, etc. used in determining the answers.
5. Round off answers to THREE decimal places unless stated differently.
6. Diagrams are not drawn to scale.
7. Detach the answer sheet from the question paper and submit with your answer book.
8. Write neatly and legibly.

Copyright reserved

QUESTION 1

1.1 As a project students collected data on how much money, in rand, is spent at the tuck shop during break. The results are presented on the graph below. The upper-class boundaries of the grouped data are plotted against the cumulative frequency.

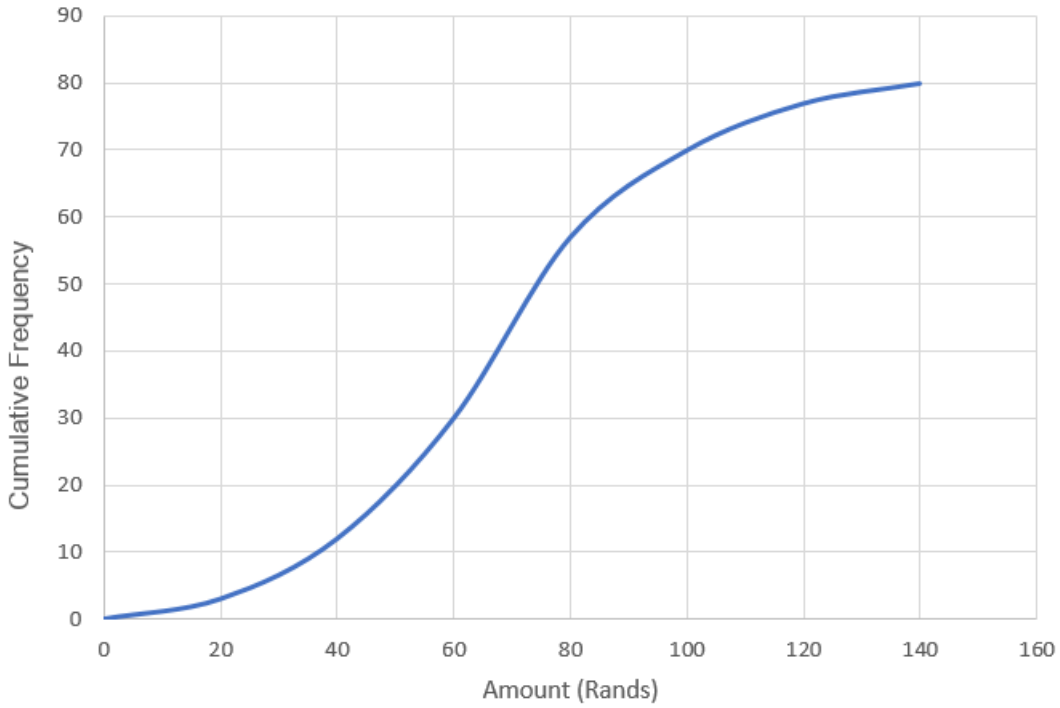

Various options are given as possible answers to the following questions. Use the graph to select the answer and write only the letter (A–E) next to the question number (1.1.1–1.1.5) in the ANSWER BOOK.

1.1.1 The graph represented above is an example of a/an …

A pictogram.
B ogive.
C line graph.
D histogram.
E pie chart.

1.1.2 How many learners took part in the study?

A 140
B 160
C 80
D 90
E Unknown number

1.1.3 The following can be directly obtained by reading off the values from the graph:

(i) The median
(ii) The mean
(iii) The lower fence

A Only (i) is correct
B (i) and (ii) are correct
C (i) and (iii) are correct
D Only (iii) is correct
E (i), (ii) and (iii) are correct

1.1.4 The value of the median is approximately equal to …

A 140.
B 45.
C 68.
D 80.
E 58.

1.1.5 How many students spent between R60 and R100 during break?

A 30.
B 40.
C 70.
D 80.
E 45.

(5 × 1) (5)

1.2 The amount of fuel (in litres) used by lecturers at a college during a month is represented as grouped data in the following table:

1.2.1 Complete the frequency table below by writing the answers next to the letters (A–D) on ANSWER SHEET 1 (attached). (4)

Classes (litres)	Frequency f_i	Midpoint x_i	$f_i x_i$
$0 \leq x < 50$	7	25	175
$50 \leq x < 100$	**A**	75	2 025
$100 \leq x < 150$	31	125	3 875
$150 \leq x < 200$	18	175	3 150
$200 \leq x < 250$	**B**	225	**C**
$250 \leq x < 300$	4	275	**D**
TOTAL	$\sum f_i = 100$		$\sum f_i x_i = 13\,250$

1.2.2 Construct a histogram for the data on ANSWER SHEET 1 (attached). (4)

1.2.3 Use the information in the frequency table to determine the value of the mean. (2)

1.2.4 Calculate the mode of the data using an appropriate formula. (3)

1.3 During a Mandela Day charity event students brought tinned food to donate to a local orphanage. The number of cans donated by a class of 15 students is recorded:

2	7	9	12	13	14	14	15
15	15	16	18	19	20	20	

1.3.1 Determine the values of the median, the lower quartile and the upper quartile. (3)

1.3.2 Calculate the values of the lower and upper fences. (4)

1.3.3 Construct a box-and-whisker plot for the data on ANSWER SHEET 2 (attached) by clearly showing the five-number summary, the fences and any outliers. (5)

[30]

QUESTION 2

2.1 A storage tank consists of a cylinder and a cone of equal radii. The height of the tank is 2,5 m. The radius of the cone, BC is 0,8 m and the slant height, AC, is 1 m.

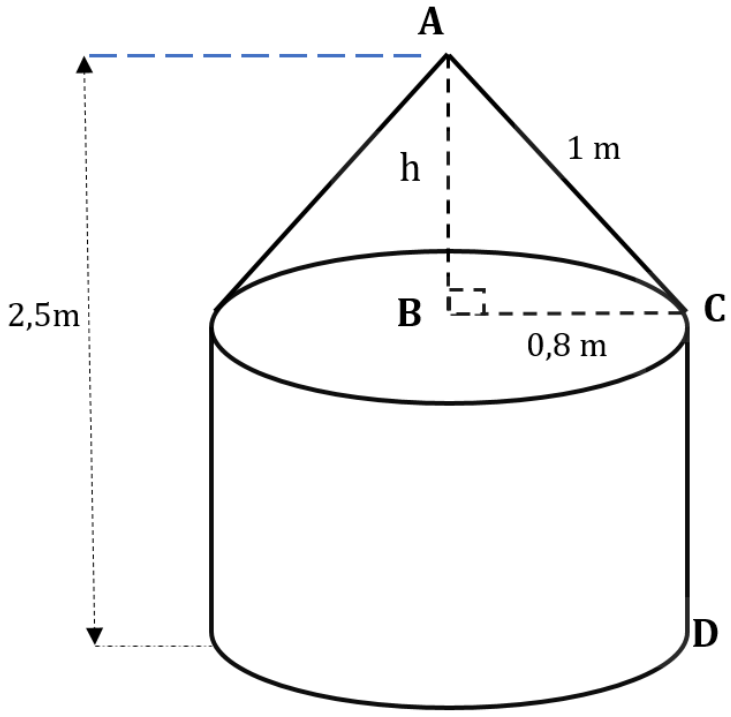

2.1.1 Calculate the perpendicular height (h) of the cone. (2)

2.1.2 Determine the length of CD, the height of the cylindrical section. (2)

2.1.3 Use the formula $V = \pi r^2 h$ to calculate the volume of the cylindrical part of the tank (2)

2.1.4 Calculate the volume of the cone. (2)

2.1.5 Determine the total volume of the tank when it is full. (2)

2.1.6 Calculate the total surface area of the tank. (4)

2.2 In the diagram below, ABCD is a quadrilateral with vertices A, $B(6;k)$, $C\left(9;4\frac{1}{2}\right)$ and $D(3;0)$. Line CD is at angle θ with the *x*-axis.

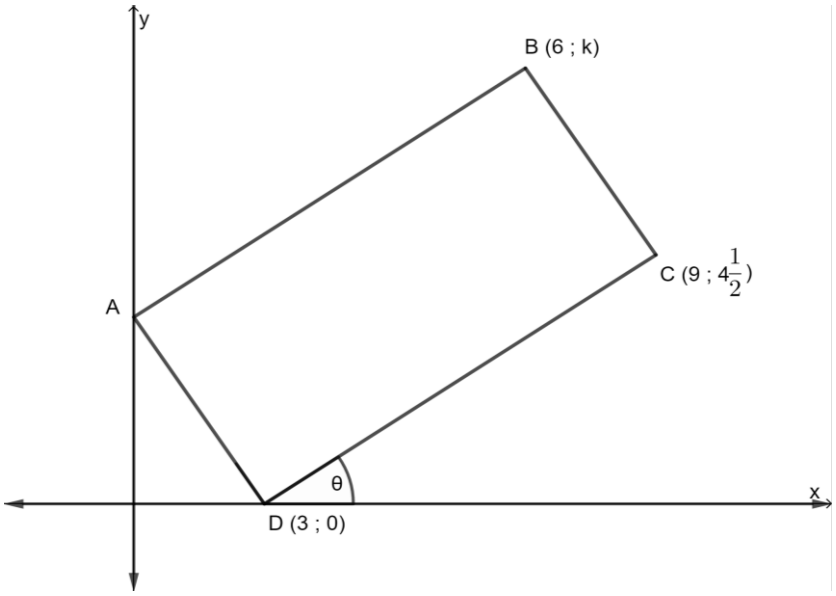

2.2.1 Determine the gradient of line CD. (2)

2.2.2 Determine the value of θ, the angle of inclination of CD. (2)

2.2.3 Given that AD is perpendicular to CD, determine the equation of AD. (3)

2.2.4 Given that AD is parallel to BC, determine the value of k. (3)

[24]

Copyright reserved

QUESTION 3

3.1 Simplify the following:

$$\frac{\sin(360^o - x).(\sin^2 x + \cos^2 x)^2}{\cos(180^o + x).\tan(180^o - x)}$$

(4)

3.2 Simplify, without the use of a calculator:

$$\frac{\sin 210^o \times \cos 240^o}{\tan 315^o} + \frac{\sin 110^o}{\cos 20^o}$$

(6)

3.3 Show that:

$$\sqrt{1 - \frac{\tan^2 \theta}{1 + \tan^2 \theta}} = \cos \theta$$

Hence or otherwise solve the equation

$$\sqrt{1 - \frac{\tan^2 \theta}{1 + \tan^2 \theta}} = 0{,}60181$$

Where $0^o \leq \theta \leq 360^o$

(7)

3. 4 Kelsy, a surveyor, needs to approximate the area of a piece of land as shown below. She walks the perimeter of the land and measures the side distances and one angle. The measurements of the side distances are as follows: PQ = 90 m, QR = 50 m, RS = 120 m and PS = 110 m. Angle $\hat{S} = 61^o$.

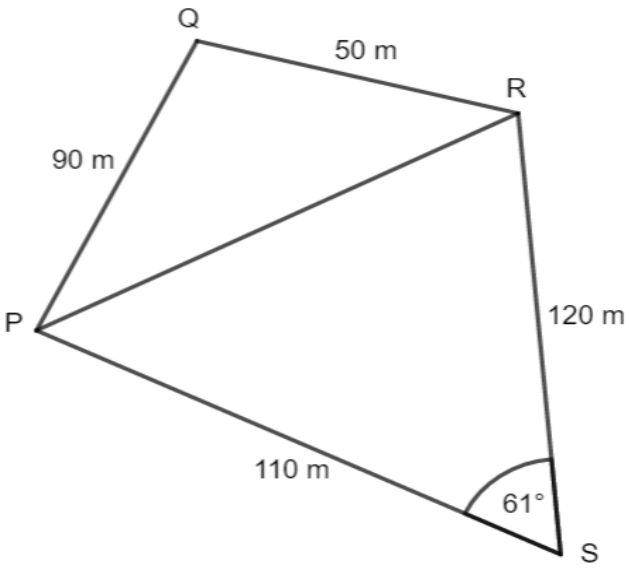

3.4.1 Calculate the length of the diagonal, PR. (3)

3.4.2 Show that angle $P\hat{Q}R = 110^\circ$ rounded off to the nearest whole number. (3)

3.4.3 Calculate the area of the piece of land. (3)

[26]

QUESTION 4

4.1 A group of students formed a social club. Each member paid a once-off R200 joining fee then R100 for every month for a year.

An incomplete 2022 financial Report for the group is given below:

ITEM	BUDGETED AMOUNT	ACTUAL AMOUNT	VARIANCE
INCOME (rand)			
Joining fees	4 000	4 000	0
Membership fees	24 000	23 800	**A**
Sales	3 500	4 860	1360
Donations	1 000	**B**	-1 000
Interest	**C**	480	-20
TOTAL	33 000	33 140	140
EXPENSES (rand)			
Braai	1 500	1 800	−300
Cash to share	**D**	12 000	0
Transport	200	600	−400
Groceries	12 000	16 000	−4 000
Beverages for resale	1 500	2 000	−500
TOTAL	**E**	32 400	−5 200
SURPLUS/DEFICIT	5 800	**F**	−5 060

4.1.1 Determine the missing values and write the answer next to the letter (A–F) in the ANSWER BOOK. (6)

4.1.2 Based on this income and expense statement, suggest ONE change that the Club should make regarding budgeted income for the following year. (1)

4.2 Wilson wants his investment to treble (to be three times the initial amount) after 8 years.

4.2.1 If his initial investment in rand is x, express the final amount A, in terms of x. (1)

4.2.2 At what interest rate should Wilson invest his money to achieve the trebling of the investment if interest is compounded monthly? (3)

4.3 Constance invested R450 000 where interest was compounded annually at 7% per annum for the first 2 years and then increased to 9% per annum for the next 4 years. Thereafter, simple interest was calculated for 3 years at 14% per annum.

Six years after the initial investment, Constance deposited a further R120 000 into the account.

4.3.1 Show the information on a timeline, indicating the time from the first deposit, the interest rates and all deposits or withdrawals. (3)

4.3.2 Calculate the value of the investment after 9 years. (6)

[20]

TOTAL: 100

Copyright reserved

FORMULA SHEET

1. Slant surface area of a pyramid $= \frac{1}{2}aln$ or $= \frac{1}{2}a\ h_s n$ (where n =number of sides)
2. Surface area of triangular pyramid $= \frac{1}{2}bh + \frac{1}{2}pl$ where p =perimeter of the base.
3. Surface area of a pyramid with an equilateral triangle as base $= \frac{\sqrt{3}}{4}s^2 + \frac{1}{2}pl$.
4. Surface area of an equilateral triangular pyramid $= \sqrt{3}s^2$
5. Surface area of a square pyramid $= b^2 + \frac{1}{2}pl$
6. Surface area of regular hexagonal pyramid $= \frac{3\sqrt{3}}{2}b^2 + \frac{1}{2}pl$
7. Volume of a pyramid $= \frac{1}{3}$(area of base) $\times$ ⊥height.
8. $s = \frac{1}{2}(a + b + c)$ and $a, b\ and\ c$ are the sides of the triangle.
9. $A = \sqrt{s(s-a)(s-b)(s-c)}$
10. Circumference of a circle $= 2\pi r$
11. Area of curved surface area of a cone $= \pi rl$ or $\pi r h_s$
12. Slant height of a cone $l = \sqrt{h^2 + r^2}$ or $= \sqrt{\text{⊥}h^2 + r^2}$
13. Volume of a cone $V = \frac{1}{3}\pi r^2 \times$⊥h
14. Area of a sphere $A = 4\pi r^2$
15. Volume of a sphere $V = \frac{4}{3}\pi r^3$
16. $m = \frac{\Delta y}{\Delta x} = \frac{y_2 - y_1}{x_2 - x_1}$
17. $(x_m; y_m) = \left(\frac{x_1 + x_2}{2}; \frac{y_1 + y_2}{2}\right)$
18. $\theta = tan^{-1}m$
19. Distance $= \sqrt{(x_2 - x_1)^2 + (y_2 - y_1)^2}$
20. $\frac{sin\theta}{cos\theta} = tan\theta$

Copyright reserved

21. $sin^2\theta + cos^2\theta = 1$

22. $\frac{sin\hat{A}}{a} = \frac{sin\hat{B}}{b} = \frac{sin\hat{C}}{c}$

23. $a^2 = b^2 + c^2 - 2bc\ cos\hat{A}$

24. $Area\ = \frac{1}{2}ab\ sin\hat{C}$

25. $\bar{x} = \frac{\sum_{i=1}^{n} x_i}{n}$

26. $\bar{x} = \frac{\sum_{i=1}^{n} f_i x_i}{n}$

27. $Q_{j\ position} = \frac{j}{4}(n+1)$

28. $Q_i = Q_3 - Q_1$

29. Upper fence = $Q_3 + 1{,}5Q_i$

30. Lower fence = $Q_1 - 1{,}5Q_i$

31. $Me = l + \frac{\left(\frac{n}{2} - F\right)}{f} \times c$

32. $Mo = l + \frac{f_m - f_{m-1}}{2f_m - f_{m-1} - f_{m+1}} \times c$

33. $I = A_0 \times \frac{r}{100} \times t \qquad or \qquad I = \frac{Prt}{100} \qquad A = P(1 + in)$

34. $A_t = A_0\left(1 + \frac{r}{100 \times m}\right)^{t \times m} \qquad or \qquad A = P(1+i)^n$

35. $A_t = A_0\left(1 - \frac{r}{100}\right)^n \qquad or \qquad A = P(1-i)^n$

Copyright reserved

ANSWER SHEET 1 **EXAMINATION NUMBER:** | | | | | | | | | | | | | |

1.2.1

Classes (litres)	Frequency f_i	Midpoint x_i	$f_i x_i$
$0 \leq x < 50$	7	25	175
$50 \leq x < 100$	**A.**	75	2 025
$100 \leq x < 150$	31	125	3 875
$150 \leq x < 200$	18	175	3 150
$200 \leq x < 250$	**B.**	225	**C.**
$250 \leq x < 300$	4	275	**D.**
TOTAL	$\sum f_i = 100$		$\sum f_i x_i = 13\,250$

1.2.2

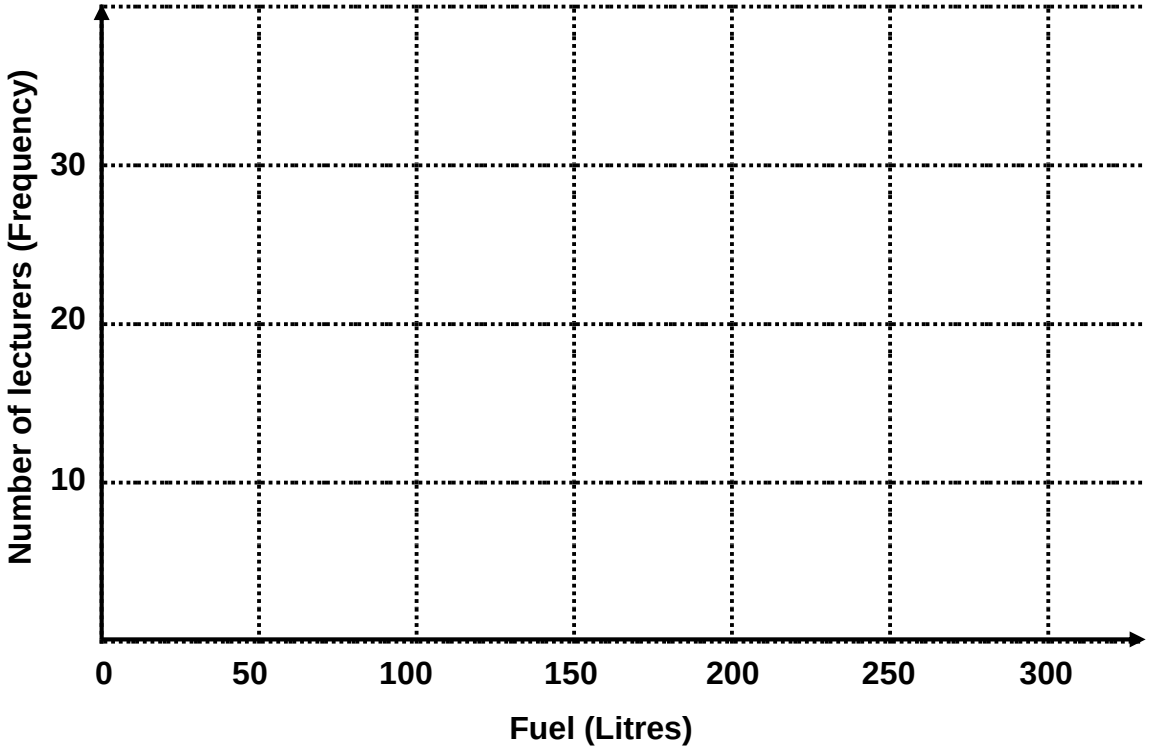

Copyright reserved

ANSWER SHEET 2 **EXAMINATION NUMBER:**

1.3.3

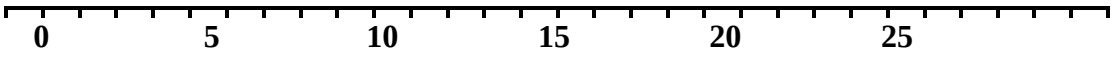

TOTAL: 100

Copyright reserved