higher education & training

Department:
Higher Education and Training
REPUBLIC OF SOUTH AFRICA

MARKING GUIDELINE

NATIONAL CERTIFICATE (VOCATIONAL)

ELECTRONIC CONTROL AND DIGITAL ELECTRONICS
NQF LEVEL 3

8 November 2022

This marking guideline consists of 7 pages.

Copyright reserved

QUESTION 1

1.1 1.1.1 Ammeter/Multi meter
1.1.2 Series
1.1.3 Polarity
1.1.4 Range/Scale
1.1.5 Ampere

(5 × 1) (5)

1.2
- A function generator will be used to create a sample waveform used to inject into the circuit.
- The oscilloscope will be used to trace the waveforms amplitude and frequency as it runs through the circuit. (2)

1.3 1.3.1
- Free electrons are not attached to any atom shell.
- Valence electrons are attached to the outer most shell of an atom.

1.3.2
- Ionised atoms are negatively or positively charged atoms.
- Doped atoms are neutrally charged.

1.3.3
- In ionic bonding, electrons leave atoms to form a negative cloud.
- Covalent bonding allows the mutual sharing of electrons.

(3 × 2) (6)

1.4 1.4.1
- Dimensions/size
- V_R – Reverse voltage
- V_F – Forward voltage
- PIV – Peak inverse voltage (Any 2 × 1)

1.4.2
- Off or on indicator lights
- Lighting
- Televisions (Any 2 × 1)

(2 × 2) (4)

1.5 1.5.1 Forward bias
1.5.2 Saturation
1.5.3 Off switch

(3 × 1) (3)

1.6
$$Ai = \frac{I_C}{I_E} \quad \checkmark$$
$$= \frac{4{,}5\ mA}{5\ mA}$$
$$= 0{,}9 \quad \checkmark$$

(2)

1.7 1.7.1 False
1.7.2 True
1.7.3 True
1.7.4 False
1.7.5 True

(5 × 1) (5)

1.8 Shunt Zener or transistor series Zener or transistor shunt Zener (2)

1.9 1.9.1
- BJTs are current-controlled and FETs are voltage-controlled devices.
- BJTs have depletion junctions and FETs have channels.

1.9.2

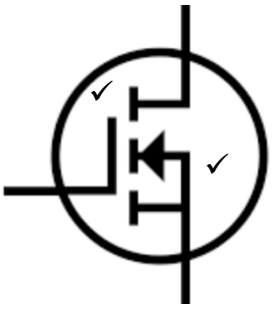

1.9.3 MOSFET transistors have a thin metal oxide✓ between the gate and channel. Electrostatic discharge can damage this layer.✓

(3 × 2) (6)

1.10 1.10.1

$$V_{out} = \left(1 + \frac{R_f}{R_{in}}\right).V_{in}$$
$$= \left(1 + \frac{20}{2}\right).2$$
$$= 22V$$

(3)

1.10.2
- The output of an inverting op-amp is 180° out of phase to its input.
- A non-inverting op-amp has no phase difference. (2)

[40]

QUESTION 2

2.1 2.1.1 Convert 11101010_2 to octal

(0 1 1) (1 0 1) (0 1 0) ✓
3 5 2 ✓

Answer = 352_8 ✓

2.1.2 Convert 110_{10} to hexadecimal

16 | 110					
16 | 6	r	0,875 x 16 =	14	= E	✓
0	r	0,375 x 16 =	6		✓

Answer = $6E_{16}$ ✓

2.1.3 Convert 64_8 to decimal

6 4
(8^1 x 6) (8^0 x 4) ✓
48 + 4
= 52 ✓

Answer = 52_{10} ✓

(3 × 3) (9)

2.2 2.2.1 Add 11110_2 + 10111_2

1 1 1 1 ✓ ✓
1 1 1 1 0
\+ 1 0 1 1 1
1 1 0 1 0 1

Answer = 110101_2 ✓ (3)

2.2.2 Multiply 1101_2 x 11_2

1 1 0 1
x 1 1
1 10 1 1 0 1 ✓
1 1 0 1 0 ✓
1 0 0 1 1 1

Answer = 100111_2 ✓ (3)

2.2.3 Divide $11011_2 \div 100_2$

```
                1 1 0 ,1✓
1 0 0 | 1 1 0 1 1 0      ✓
      - 1 0 0
        0 1 0 1
        - 1 0 0      ✓
          0 0 1 1 0
            - 1 0 0
```

Answer = $110{,}1_2$ ✓ (4)

2.3 2.3.1

- A decade counter is made up of four-bit element blocks.
- In a synchronous decade counter the clock pulse is connected to all the bit elements.
- The elements are wired such that on the count of 1010, it resets to a 0000 or zero count.

2.3.2

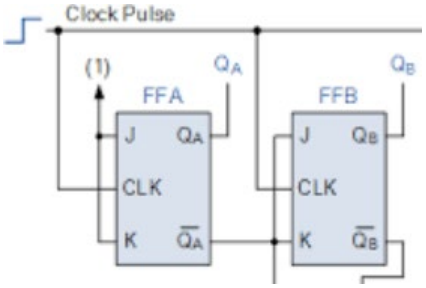

(2 × 3) (6)
[25]

QUESTION 3

3.1

- The motherboard is the main connection hub allowing all hardware to be connected via this board.
- Cache and ROM ICs on the motherboard hold the BIOS program that is used for the basic start-up process.
- All communication bus lines run via the motherboard which also controls the speed of the data processing. (3)

3.2

- Central Processing Unit (CPU)
- RAM modules
- Cooling fan
- Hard disc drive (4)

3.3
- Check that the power cable to the monitor is connected and switched on.
- Press the power button on the monitor to turn monitor on.
- Listen to the number of beeps on start-up to confirm that the POST locates the monitor.
- Connect another monitor to the PC to check if the problem is with the monitor or the PC. (3)

3.4
- Universal serial bus (USB)
- PS2
- Parallel port
- Serial port
- VGA (5)

[15]

QUESTION 4

4.1
- Pressure
- Movement
- Displacement
- Liquid level (Any 2 × 1) (2)

4.2
- The type of supply needed for the coils.
- The environment where the transducer will be used.
- The cost of the transducer.
- The quantity being measured. (Any 3 × 1) (3)

4.3
4.3.1 C
4.3.2 A
4.3.3 F
4.3.4 D
4.3.5 B

(5 × 1) (5)

[10]

QUESTION 5

5.1
- Hydraulics
- Production
- Pneumatics
- Automation
- Robotics

(Any 3 × 1) (3)

5.2 The memory of a PLC unit holds the program that has been uploaded to the unit. Instructions and operation of the PLC unit are held in the ROM memory. By using the program memory one can run diagnostic tests on the input and output devices to check for faults. (2)

5.3

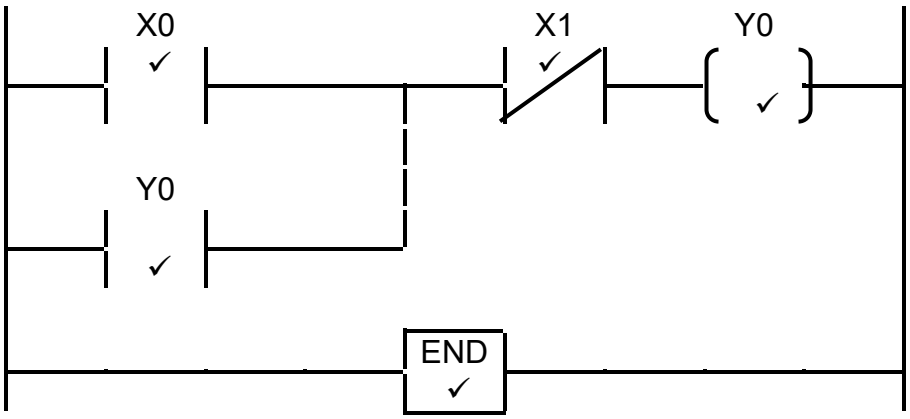

(5)
[10]

TOTAL: 100

Copyright reserved