higher education & training

Department:
Higher Education and Training
REPUBLIC OF SOUTH AFRICA

MARKING GUIDELINE

NATIONAL CERTIFICATE (VOCATIONAL)

ELECTRONIC CONTROL AND DIGITAL ELECTRONICS
NQF LEVEL 3

17 November 2023

This marking guideline consists of 6 pages.

Copyright reserved

QUESTION 1

1.1 1.1.1 V-amp = no. of div × volts/div✓
= 2 × 2✓
= 4 V✓ (3)

1.1.2 T = no. of div × time/div✓
= 4 × 0,2 mS✓
= 0,8 mS✓ (3)

1.1.3 $F = \frac{1}{T}$
$= \frac{1}{0,8 \times 10^{-3}}$✓
= 1 250 Hz✓ (2)

1.2 1.2.1
- The valence number of electrons is four, midway between conductor and insulator.
- When they bond, the maximum of eight valence electrons is held.
- The crystal lattice structure allows easy doping. (Any 2 × 1) (2)

1.2.2 Covalent bonding (1)

1.2.3
- The atoms used for doping do not lose or gain any electrons.
- The free electron or the hole does not change the polarity of the structure. (2)

1.3 1.3.1 As the temperature increases,✓ so too does the reverse current increase.✓ (2)

1.3.2
- Televisions
- Digital clocks
- Calculators
- Instrument panels (Any 2 × 1) (2)

1.3.3 Five segments (1)

1.4 1.4.1 The collector current rating of the BC141 is higher (1 000 mA) than that of the BC107 (100 mA).

1.4.2 The BC109 has a lower power rating (300 mW) than the BC160 (3 700 mW).

1.4.3 The BC161 is a PNP-transistor compared to the NPN BC 141.

1.4.4 The BC108 has a higher hFE rating (110) compared to the BC140 (40).

1.4.5 BC161

(5 × 1) (5)

Copyright reserved

1.5 1.5.1 False
1.5.2 True
1.5.3 False
1.5.4 True
1.5.5 False

(5 × 1) (5)

1.6 1.6.1
- An open channel of P-type material is doped between the source and the drain leads.
- The middle gate region is doped with an N-type material.
- A depletion region is formed around the gates' middle junction. (3)

1.6.2
- There is a channel that exists between the source and the drain. With 0 V at the gate, there is hole flow through the channel.
- By applying a positive gate voltage, the N-type substrate is pulled towards the gate, shutting off the channel. No current will flow.
- Positive holes are also forced out of the channel by the positive biasing.
- The depletion type can also be biased with a negative voltage, widening the channel. More current will flow through the channel.

(Any 3 × 1) (3)

1.7 1.7.1 Inverting
1.7.2 Voltage follower
1.7.3 Capacitor
1.7.4 Non-inverting or voltage follower
1.7.5 Summing or adder

(5 × 1) (5)

1.8 Wave shaping triggers output waveforms. It is used to trigger triacs. (1)
[40]

QUESTION 2

2.1 2.1.1 36_8 to binary:

3 6
011 ✓ 110 ✓

Answer: $36_8 = 011110_2$✓

2.1.2 110001102 to hexadecimal:

(1100) (0110)
12 6 ✓
C ✓

Answer: $11000110_2 = C6_{16}$ ✓

2.1.3 209_{10} to octal:

8 | 209		
8 | 26	0,125 × 8 = 1	
8 | 3	0,25 × 8 = 2	✓
0	0,375 × 8 = 3	✓

Answer: $209_{10} = 321_8$ ✓

(3 × 3) (9)

2.2 2.2.1

		✓	✓		✓	
	1	1+1	1	1	1	
		0	1	0	1	1
			1	1	1	1
+			1	0	0	1
	1	0	0	0	1	1

Answer: 100011_2 ✓ (4)

2.2.2

		1	1	1	0
		×		1	0
	0	0	0	0	0 ✓
	1	1	1	0	0 ✓
	1	1	1	0	0

Answer: 11100_2 ✓ (3)

2.2.3

			.	.	1	0	0	,1
1	1	0	1	1	1	0	1	0 ✓
		-	1	1	0 ✓			
			0	0	1	0	1	0
					-	1	1	0 ✓
						1	0	0

Answer: $100,1_2$ ✓ (4)

2.3 2.3.1

- An external clock pulse is connected to each flip-flop.
- Only the first flip-flop will toggle high on the first clock pulse.
- On the next clock pulse, the Q output of the first flip-flop will toggle the next flip-flop.
- The sequence continues down the line of flip-flops, allowing each bit element to count in binary order.

(Any valid answer) (4 × 1) (4)

2.3.2 Binary count = 1001 = 9 (1)

[25]

QUESTION 3

3.1
- Tower
- Monitor
- Mouse
- Keyboard (4)

3.2
- The number and sequence of the beeps
- The colour and blinks of the indicator LED
- The tower shuts down or off in protection (Any 2 × 1) (2)

3.3
- The program is loaded on the motherboard's ROM.
- On start-up, the program checks the operating condition of all attached hardware.
- If all is ok, it sends a message to the CPU to continue its operation.
- If faults occur, it sends error messages to the user. (Any 3 × 1) (3)

3.4 3.4.1 Motherboard✓ – the main hub that allows communication and connection to all hardware✓

3.4.2 RAM modules✓ – temporary memory that stores the program while being used by the operator✓

3.4.3 Microprocessor/Central processing unit/CPU✓ – the main brain of a computer that controls all operations✓

(3 × 2) (6)

[15]

QUESTION 4

4.1 4.1.1 Bellows/Bourdon tube
4.1.2 Potentiometer/Linear variable differential transformer (LVDT)
4.1.3 Photosensitive device/Rotating inductive wheel
4.1.4 Thermistor/Thermocouple device

(4 × 1) (4)

4.2 A resistive strain gauge is connected as one arm of the Wheatstone bridge.✓ With no force applied to it, the Wheatstone bridge is balanced and the meter is zeroed.✓ As force is applied to the strain gauge, its resistance will change.✓ The changing resistance will offset the balance of the Wheatstone bridge. The attached meter will measure the change and indicate its value as the force exerted.✓ (4)

4.3 To convert mechanical energy✓ to electrical energy✓ (2)

[10]

QUESTION 5

5.1
5.1.1 E
5.1.2 F
5.1.3 B
5.1.4 A
5.1.5 D

(5 × 1) (5)

5.2

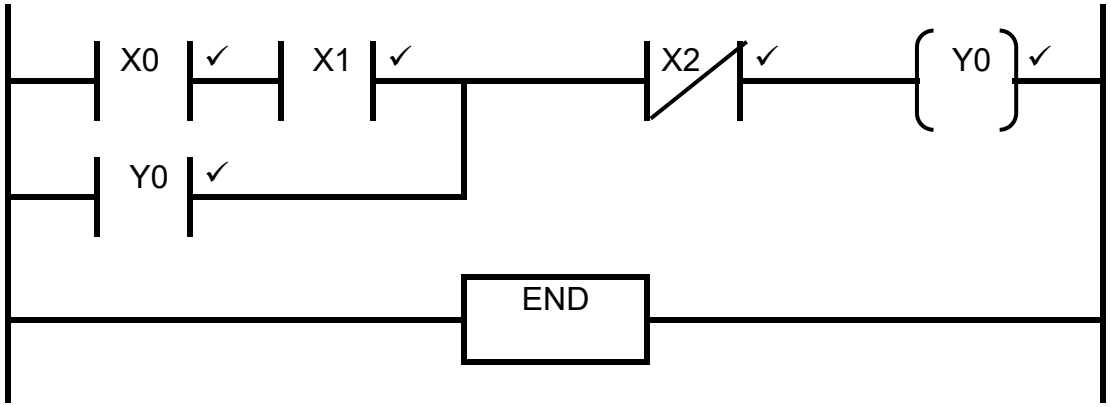

Inputs:
ON switch = X0
Sensor = X1
OFF switch = X2

Outputs:
Heating element. = Y0

NOTE: Input and output addresses can be changed to suit the type of PLC used. (5)

[10]

TOTAL: 100

Copyright reserved