higher education & training

Department:
Higher Education and Training
REPUBLIC OF SOUTH AFRICA

MARKING GUIDELINE

NATIONAL CERTIFICATE (VOCATIONAL)

ELECTRICAL SYSTEMS AND CONSTRUCTION
NQF LEVEL 3

16 November 2022

This marking guideline consists of 7 pages.

Copyright reserved

QUESTION 1

1.1 The aim of SANS 10142-1 is to ensure that people, animals and property are protected from hazards✓ that can arise from the operation of an electrical installation under both normal and fault conditions.✓ (2)

1.2
1.2.1 Consumer's earth terminal
1.2.2 Earthed
1.2.3 Earth continuity conductor
1.2.4 Supplier's earth terminal
1.2.5 Earth electrode
(5 × 1) (5)

1.3 An appliance that distributes, filters or transforms the light transmitted from one or more lamps✓ and that includes all the parts necessary for supporting, fixing and protecting the lamps but not the lamps themselves,✓ and, when necessary, circuit auxiliaries together with the means for connecting them to the supply.✓ (3)

1.4
1.4.1 10 A
1.4.2 20 A
1.4.3 35 A / 40 A
(3 × 1) (3)

1.5
A – Locknut
B – Washer/Compression ring
C – Body/Gland body
D – Seal/compression bush
E – Sealing nut/Compression nut (5)

1.6
- It is less expensive than metal conduits
- It weighs less than metal conduits
- It is quick and easy to install
- It is easy to transport
- It has an attractive finish
- It has good insulating properties
- It has good impact strength without permanent distortion
- It is anti-corrosive (Any 3 × 1) (3)

1.7
- The current carrying capacity
- The permissible voltage drop
- The size and type of load to be supplied
- The prospective fault current
- The circuit protection
- The installation conditions (Any 2 × 1) (2)

1.8 A cable that has a covering of metallic wires or galvanized steel wires or steel tape✓ as a protection against mechanical damage.✓ (2)

[25]

Copyright reserved

QUESTION 2

2.1

2.1.1	B	
2.1.2	C	
2.1.3	D	
2.1.4	C	
2.1.5	B	
2.1.6	D	
2.1.7	A	
2.1.8	A	
2.1.9	B	
2.1.10	A	
		(10 × 1) (10)

2.2
- Circuits
- Fuses
- Switches
- Terminals
- Earth leakage units
- Circuit breakers
- Distribution boards (Any 4 × 1) (4)

2.3 In a TN-C-S earthing system, the neutral and protective functions are combined in a single conductor between the source and point of supply✓ and are separated in the consumer's electrical installation.✓ All exposed conductive parts of the consumer's installation are connected to the PEN conductor via the supply earth terminal.✓ (3)

2.4
- Main circuit breaker
- Kilo-watt hour meter
- Supplier's earth terminal/earth connection
- Supply cable (Any 2 × 1) (2)

2.5

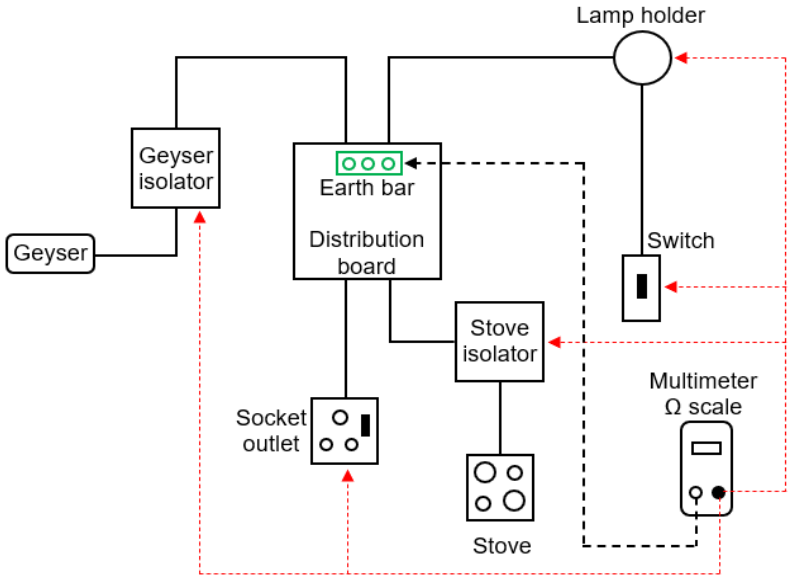

Distribution board =1 mark
Multi meter lead connected to distribution board = 1 mark
Multi meter lead connected to any conductive part = 1 mark
(3 × 1)
Any 3 labels (3 × 1) (6)
[25]

QUESTION 3

3.1
- High-risk tasks where incidents have or may have the potential to result in serious injury
- Where any part of a hazard assessment or risk analysis shows a high or sufficient risk to a worker
- Where accidents occur on a frequent basis
- Where tasks are new or where equipment has been added, replaced or modernised
- Where there are two or more workers who must perform specific tasks simultaneously
- Where tasks are performed infrequently (Any 3 × 1) (3)

3.2 3.2.1 Multi meter (1)

3.2.2 Lowest ohm scale (1)

3.2.3 No.✓ With the isolator in the off position, a reading of infinity should be obtained.✓ (2)

3.3
- Preventative
- Corrective
- Predictive (3)

3.4
- Resistance of start winding
- Resistance of run winding
- Continuity of centrifugal switch
- Insulation resistance between windings
- Insulation resistance between windings and earth
- Capacitance test (Any 4 × 1) (4)

3.5 A type of switch that is used for the purpose of breaking the power circuit when a cover or lid is removed. (1)
[15]

QUESTION 4

4.1 4.1.1
- The most frequently used system because it is the simplest and least expensive to build
- Operation and expansion are simple (Any 1 × 1) (1)

4.1.2
- It is more reliable than the radial distribution system
- Because the load points can be supplied from two or more directions, it is possible to remove any section of the loop from service for maintenance without causing an outage at other load points. (Any 1 × 1) (1)

4.2
- Underground LV network
- Overhead LV network (2)

4.3
- When working on electrical circuits
- When attending to jammed mechanisms
- When carrying out maintenance or repair work on machinery
- When bypassing guards or safety devices (Any 1 × 1) (1)

4.4
- The work to be done
- The hazards of the system or equipment to be worked on
- The people doing the work and the level of supervision required
- The precautions to be taken
- The system of work to be employed (Any 2 × 1) (2)

4.5
- To maintain the potential of any part of a system at a definite value with respect to earth
- To allow current to flow to the earth in the event of a fault so that the protective gear will operate to isolate the faulty circuit
- To ensure that, in the event of a fault, apparatus cannot reach a dangerous potential with respect to earth (3)
[10]

Copyright reserved

QUESTION 5

5.1 When an electric current is passed through the tungsten filament,✓ a voltage drop occurs, which consumes power.✓ This produces heat, which in turn raises the temperature of the filament and causes it to glow.✓ (3)

5.2 1 000 hours (1)

5.3

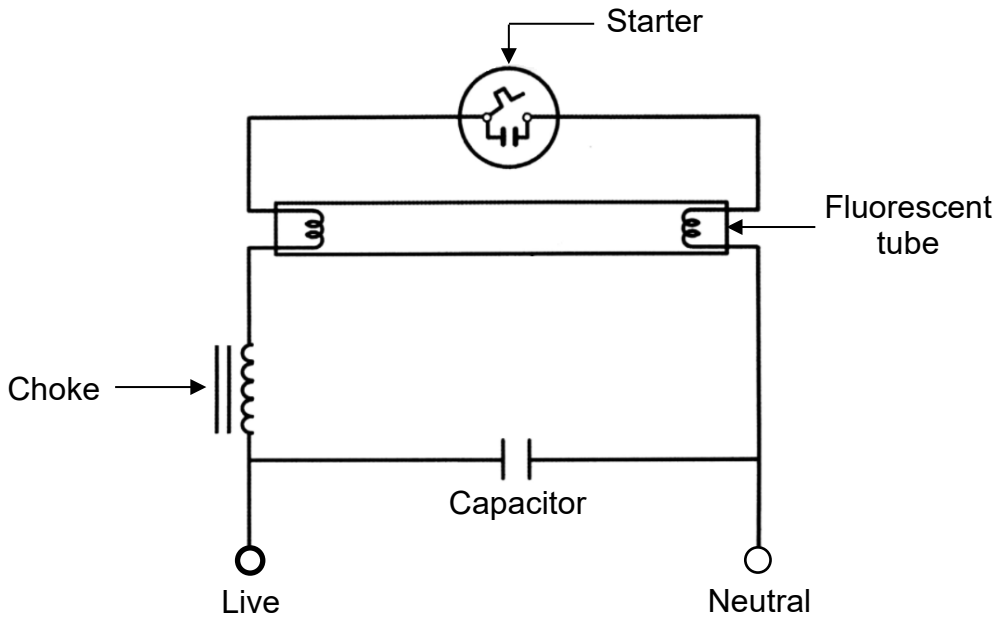

Starter correctly connected = 1 mark
Choke correctly connected = 1 mark
Capacitor correctly connected = 1 mark
(3 × 1)
Any 2 labels (2 × 1) (5)

5.4
- Drawing offices
- Main shop floors
- Furniture stores (Any 2 × 1) (2)

5.5
- Checking all connections and visible wiring
- Cleaning the lighting system
- Checking the lighting load of each circuit
- Updating the lighting system maintenance log sheet and manual (4)

[15]

QUESTION 6

6.1 This is equipment that keeps a person from reaching a point where he or she can fall.✓ For example, it allows someone to work up to the edge of a roof but not to fall.✓ This equipment includes line systems, warning lines, monitor systems and approved safety belts or harnesses attached to secure anchorage points.✓ (3)

6.2 Photovoltaic effect (1)

6.3 Each panel or module has a diode connected across it to ensure that if one panel is shaded (not enough light shines on it),✓ the current produced by the unshaded panel can flow through the by-pass diode to avoid the high resistance of the shaded panel.✓ (2)

6.4
- Savings on monthly electricity bill
- Conserving non-renewable energy fuels for applications for which there are currently no easily available renewable energy sources
- Increasing the resale value of a property
- Harnessing solar energy for domestic and commercial applications in the most cost effective and environmentally friendly way
- Saving interior space since these systems are usually located on rooftops
- Excellent safety features as they eliminate the risk of electrical hazards associated with electric geysers
- Requires little or no maintenance
- Creates jobs in the solar industry (Any 4 × 1) (4)

[10]

TOTAL: 100

Copyright reserved