higher education & training

Department:
Higher Education and Training
REPUBLIC OF SOUTH AFRICA

NATIONAL CERTIFICATE (VOCATIONAL)

ELECTRICAL PRINCIPLES AND PRACTICE
NQF LEVEL 3

(12041003)

04 November 2022 (X-paper)
09:00–12:00

This question paper consists of 7 pages and a 2-page formula sheet.

051Q1N2204

Copyright reserved

TIME: 3 HOURS
MARKS: 100

INSTRUCTIONS AND INFORMATION

1. Answer all the questions.
2. Read all the questions carefully.
3. Number the answers according to the numbering system used in this question paper.
4. Start each section on a new page.
5. Use only a blue or black pen.
6. Write neatly and legibly.

Copyright reserved

QUESTION 1

1.1 Refer to FIGURE 1 below and answer the questions that follow:

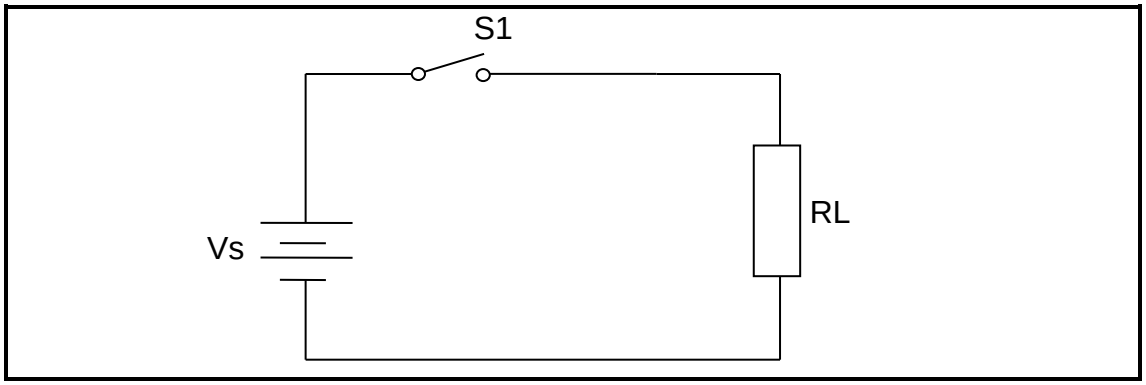

FIGURE 1

1.1.1 Name the voltage that you would measure across the terminals of the battery in the circuit in FIGURE 1 when switch (S1) is closed.

1.1.2 Name the voltage that you would measure across the terminals of the battery in the circuit in FIGURE 1 when switch (S1) is open.

(2 × 1) (2)

1.2 An atom is the basic building block of matter.

1.2.1 Name the TWO particles found in the nucleus and state the charge on each. (2 × 2) (4)

1.2.2 Which particle orbits around the nucleus of an atom? (1)

1.2.3 What do we call a valence electron that has left its orbit? (1)

1.3 Explain how a neutral atom becomes …

1.3.1 positively charged.

1.3.2 negatively charged.

(2 × 1) (2)

1.4 Calculate the resistance of a copper conductor with a length of 6 km and a cross-sectional area of 10 mm^2. Take the resistivity of copper to be 0,017 μΩ.m. (3)

1.5 Explain the effect of temperature on carbon. (2)

[15]

QUESTION 2

2.1 Describe *Fleming's right-hand rule*. (4)

2.2 What is the purpose of a brush with regard to the operation of a dc motor? (2)

2.3 A conductor with a length of 400 mm moves at a uniform velocity of 10 m/s at right angles with a uniform magnetic field with a flux density of 5 T.

Calculate the following:

2.3.1 The maximum emf induced in a conductor.

2.3.2 The instantaneous value of the induced emf if the conductor has moved through 45° from zero.

(2 × 2) (4)

2.4 Calculate the magnetic flux density if 55 mWb is spread over a cross-sectional area of 16 cm^2. (2)

2.5 Define the term *magnetic flux density.* (2)

2.6 Two parallel conductors are 2 mm apart and carry a current of 3 A.

Calculate the force between these conductors. (2)

2.7 A coil with a length of 50 cm lies at an angle of 60° to a magnetic field with a flux density of 4 T.

Calculate the force on a conductor when 12 A flows through it. (2)

2.8 Calculate the magnetomotive force of an electromagnet wound with 300 turns when it is energised with a current of 5 A. (2)

[20]

QUESTION 3

3.1 Explain what you understand by the term *terminal voltage.* (2)

3.2 Explain the difference between *self-inductance* and *mutual inductance.* (4)

3.3 List TWO practical applications of mercury cells. (2)

3.4 Calculate the inductance of a coil if an emf of 3,2 V is induced in the coil when the current changes at a rate of 16 A/s. (2)

Copyright reserved

3.5

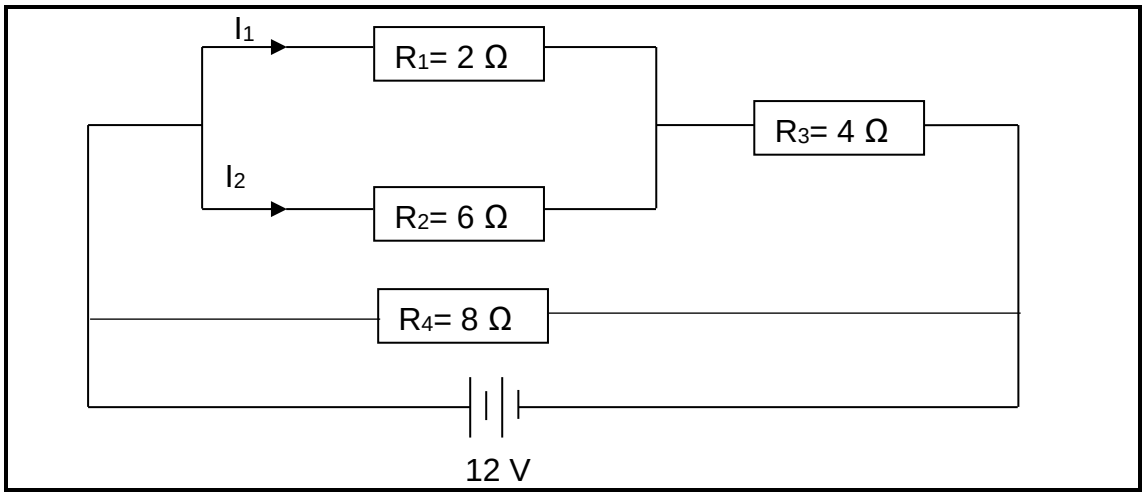

FIGURE 2

Study FIGURE 2 to calculate the following:

3.5.1 The total resistance of the circuit. (5)

3.5.2 The voltage drop across the 4 Ω resistor. (4)

3.5.3 The total current of the circuit when the 2 Ω resistor becomes a short circuit. (4)

3.6 Three single-phase transformers are connected in delta-star. The primary voltage is 6,6 kV and the secondary phase voltage is 220 V.

Calculate the following:

3.6.1 The primary phase voltage (1)

3.6.2 The transformer ratio (2)

3.6.3 The secondary line voltage (2)

3.7 Explain the function of a *Buchholz relay* used in transformers. (2)

[30]

QUESTION 4

4.1 A moving-coil instrument gives full scale deflection when a current of 10 mA flows through it. The instrument has an internal resistance of 8 Ω.

Calculate the values of additional circuit components required to enable the instrument to be used as:

4.1.1 An ammeter reading 0 to 2 A (3)

4.1.2 A voltmeter reading 0 to 125 V (2)

4.2 Refer to FIGURE 3 below and answer the following questions:



FIGURE 3

4.2.1 Identify the instrument in FIGURE 3 above. (1)

4.2.2 What is the function of the instrument in FIGURE 3? (2)

4.2.3 Explain how the instrument in FIGURE 3 should be stored. (5)

4.3 Name TWO types of measuring instruments that are used to measure current. (2)

[15]

QUESTION 5

5.1 What type of winding would be used for the following applications?

5.1.1 High voltage and low current

5.1.2 Low voltage and high current

(2 × 1) (2)

5.2 Study FIGURE 4 below and answer the questions that follow:

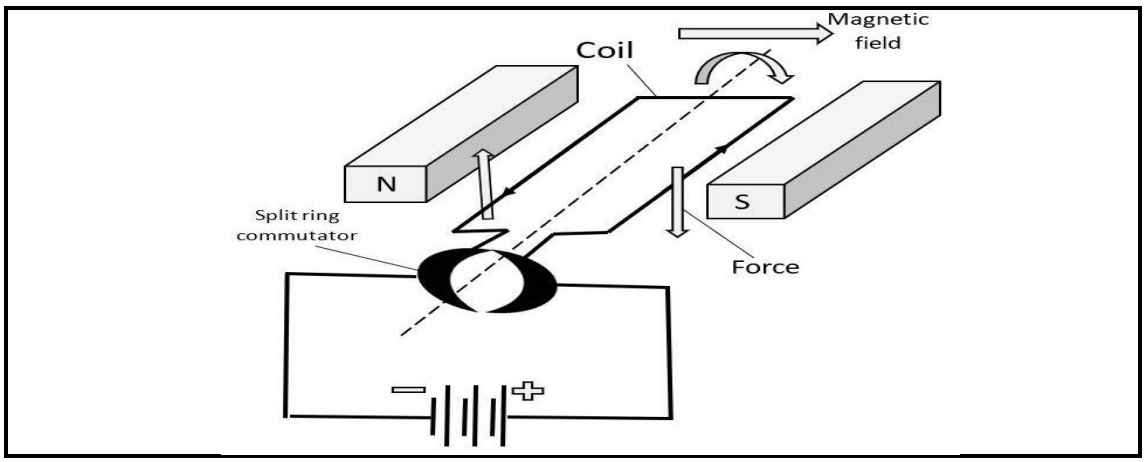

FIGURE 4

5.2.1 Name the machine represented in FIGURE 4 above. (1)

5.2.2 State the function of this machine. (2)

5.3 A dc shunt machine has an armature resistance of 0,3 ohms and a terminal voltage of 250 volts. The machine has a shunt field resistance of 100 ohms.

Calculate the current drawn from the supply when the machine operates as a motor with a back emf of 220 volts. (5)

5.4 A series generator delivers 70 A at 250 V. The armature and series field resistances are 0,25 ohms and 0,04 ohms respectively.

Calculate the emf generated. (3)

5.5 Give THREE practical applications of resistance-start induction-run motors. (3)

5.6 Name TWO types of core losses that occur in a dc machine. (2)

5.7 List TWO characteristics of a series motor. (2)

[20]

TOTAL: 100

Copyright reserved

FORMULAE SHEET – ELECTRICAL PRINCIPLES AND PRACTICE L3

1. $\boldsymbol{Cos\phi = \frac{R}{Z}}$

2. $\boldsymbol{P = V\ I\ Cos\phi}$

3. $Q = V\ I\ Sin\phi$

4. $\boldsymbol{S = V\ I}$

5. $V_1 = \left(\frac{R_1}{R_t}\right) V_T$

6. $\boldsymbol{I_1 = \left(\frac{R_2}{R_1 + R_2}\right) I_T}$

7. $R_T = R_1 + R_2 + R_3 + \cdots + R_n$

8. $\frac{1}{R_T} = \frac{1}{R_1} + \frac{1}{R_2} + \frac{1}{R_3} + \cdots + \frac{1}{R_n}$

9. $\frac{V_1}{V_2} = \frac{N_1}{N_2} = \frac{I_2}{I_1}$

10. $V_L = \sqrt{3}\, V\ p\ h$

11. $\boldsymbol{E = V - I_a R_a}$

12. $\boldsymbol{f = \frac{Np}{60}}$

13. $S = \frac{N_s - N_r}{N_s}$

14. $\boldsymbol{R_{sh} = \frac{I_m R_m}{I_{sh}}}$

17. $\tan\boldsymbol{\phi} = \sqrt{3}\left(\frac{\boldsymbol{W_1 - W_2}}{\boldsymbol{W_1 + W_2}}\right)$

18. $E = V + I\,r$

19. $\boldsymbol{V = I\ R}$

20. $R = \frac{p\ l}{A}$

21. $\boldsymbol{R_t = R_0(1 + \alpha t)}$

22. $R_t = R_0[1 + \propto_0 (t - \emptyset)]$

23. $P = V\ I$

24. $E = I^2\ R\ t$

25. $\boldsymbol{\eta = \frac{P_0}{P_{in}} \times 100}$

26. $\boldsymbol{X_L = 2\pi\ f\ L}$

27. $X_C = \frac{1}{2\pi\ f\ C}$

28. $\boldsymbol{Z = \sqrt{R^2 + (X_L - X_C)^2}}$

29. $Mmf = N\ I$

30. $H = \frac{Mmf}{l}$

Copyright reserved

31. $R_{se} = \frac{V_t}{I_t} - R_m$

32. $F = B\ I\ l$

33. $E = -L\frac{di}{dt}$

34. $A = \frac{\pi\ d^2}{4}$

35. $E = \frac{1}{2}\ C\ V^2$

36. $Q = C\ V$

37. $F = 2\times10^{-7} \times \frac{I_1\ I_2}{d}$

38. $I = \frac{Emf}{R + r_T}$

39. $L = N\frac{\Delta\ \phi}{\Delta\ I}$

40. $E = V + R_a I_a$

41. $P = \sqrt{3}\ V_L I_L\ cos\theta$

42. $S = \sqrt{3}\ V_L I_L$

43. $B = \frac{\Phi}{A}$

44. $E = B\ l\ v$

45. $E = -N\ \frac{d\emptyset}{dt}$

46. $E = \frac{V}{d}$

47. $E = \frac{1}{2}LI^2$

48. $Q = It$

49. $C_T = C_1 + C_2 + C_3 + \cdots + C_n$

50. $\frac{1}{C_T} = \frac{1}{C_1} + \frac{1}{C_2} + \frac{1}{C_3} + \cdots + \frac{1}{C_n}$

51. $L_T = L_1 + L_2 + L_3 + \cdots + L_n$

52. $\frac{1}{L_T} = \frac{1}{L_1} + \frac{1}{L_2} + \frac{1}{L_3} + \cdots + \frac{1}{L_n}$

53. $Q = \sqrt{3}\ V_L I_L\ sin\theta$

54. $Pf = cos\theta$

Copyright reserved