higher education & training

Department:
Higher Education and Training
REPUBLIC OF SOUTH AFRICA

MARKING GUIDELINE

NATIONAL CERTIFICATE (VOCATIONAL)

CONCRETE STRUCTURES
NQF LEVEL 3

16 November 2022

This marking guideline consists of 6 pages.

Copyright reserved

QUESTION 1

1.1
1.1.1 True
1.1.2 True
1.1.3 False
1.1.4 True
1.1.5 False
1.1.6 False
1.1.7 True
1.1.8 False
1.1.9 False
1.1.10 True

(10 × 1) (10)

1.2

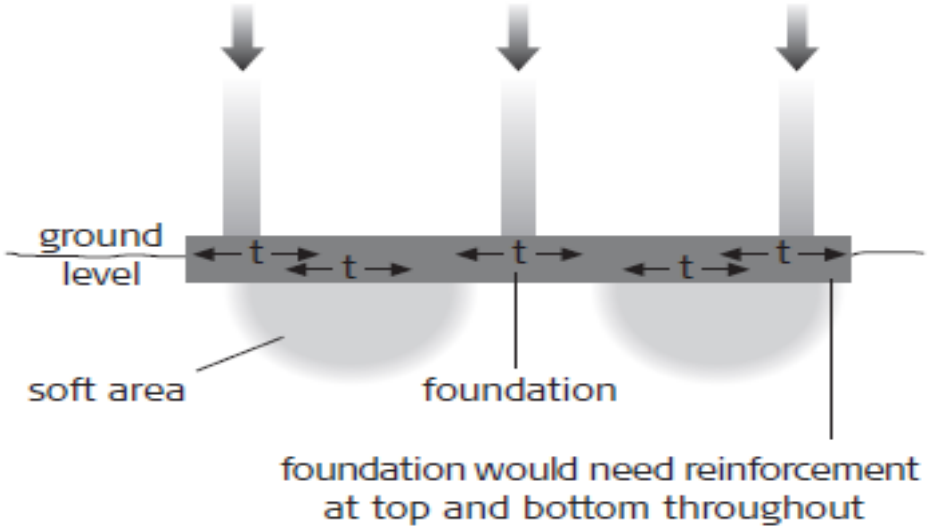

Mark allocation

CORRECTNESS	TITLE	LABELS	TOTAL
1	1	3	5

(5)

1.3

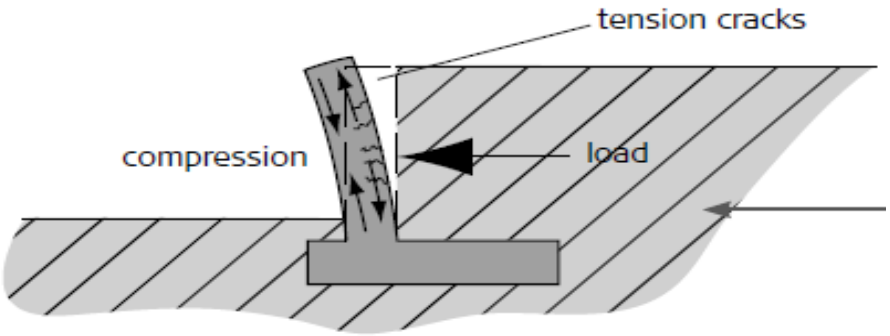

Mark allocation

CORRECTNESS	TITLE	LABELS	TOTAL
1	1	3	5

(5)

1.4

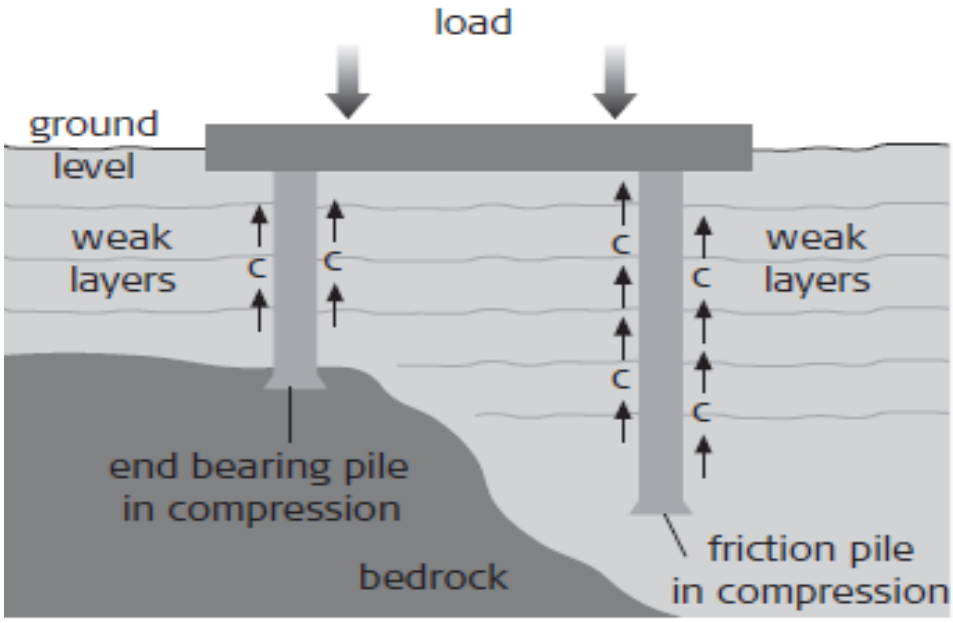

Mark allocation

CORRECTNESS	TITLE	LABELS	TOTAL
1	1	3	5

(5)
[25]

QUESTION 2

2.1 When steel is cut into short reinforcing bars and placed randomly, the concrete grips these reinforcing bars and they will be able to strengthen the concrete. (2)

2.2 2.2.1 Metal is pulled through a small hole in a die, which is a specification tool used in manufacturing industries to cut and shape a wide variety of products and components.

2.2.2 A punch forces the metal sheet into a die.

2.2.3 The metal strip is passed between two rolls that have a narrow gap between them.

2.2.4 The metal sheet is pressed onto a shaped die or mould to form a complex shape, such as a car body panel.

2.2.5 The shape and size of a metal are changed at room temperature

(5 × 2) (10)

2.3

2.3.1 Two diametrically opposite longitudinal ribs with herringbone pattern deformations on either side of the ribs

2.3.2 Two diametrically opposite longitudinal ribs in a spiral form with inclined deformations in the same direction on either side of the ribs

2.3.3 Two diametrically opposite longitudinal ribs with inclined deformation in the same direction on either side of the ribs

(3 × 2) (6)

2.4
- It is a sheet of steel mesh made by laying cold-rolled steel across each other.
- Welded steel mesh is generally used for slabs on the road and for suspended slabs walls. (Any ONE) (1)

2.5

Advantages	Disadvantages
• It is much faster to fix steel mesh than reinforcing bars. • Labour costs are cheaper and concrete can be placed into the formwork earlier. • Less bending and sorting of the bars are required.	• Depending on the size of the panel of welded mesh, special lifting equipment may be needed to lift and move sheets and reinforcement cages. • Steel mesh is very expensive to use. It is very difficult to change the amount of steel to suit the loading in the structure, and so the reinforcing may not be very economical. • The size of the mesh panel is often different from the size one needs, therefore there is considerable wastage from cutting the panels to size.

(6)
[25]

QUESTION 3

3.1 3.1.1 A unique identifying number that is used to cross-reference individual line entries on the detailed drawing

3.1.2 Each part of a building

3.1.3 A standard notation for shapes of a reinforcing bar

3.1.4 A list of all reinforcement needed for a structure showing the bars, cutting lengths, number of bars needed and the different sizes and shapes

3.1.5 A set of rules people agree to use

(5 × 1) (5)

Copyright reserved

3.2

NO.	DESCRIPTION	LINE	GENERAL APPLICATION
3.2.1	Continuous thick lines	(a)	(b) Normally refer to either reinforcing bars or a concrete edge that can be seen
3.2.2	Continuous thin lines	(c)	(d) Normally refer to dimension lines
3.2.3	Broken lines	(e)	(f) Normally refer to either reinforcing bars detailed on another drawing or a concrete edge that cannot be seen
3.2.4	Chain dotted lines	(g)	(h) Normally refer to centre lines
3.2.5	Shaded portions or hatched areas	(l)	(j) Normally refer to a view through a section of an object

(10)

3.3 3.3.1

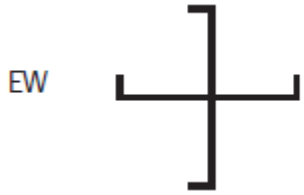

3.3.2



3.3.3



3.3.4



3.3.5

TOG 

(5 × 2) (10)
[25]

QUESTION 4

4.1 Cutting and bending sheet, bar label, delivery note (3)

4.2

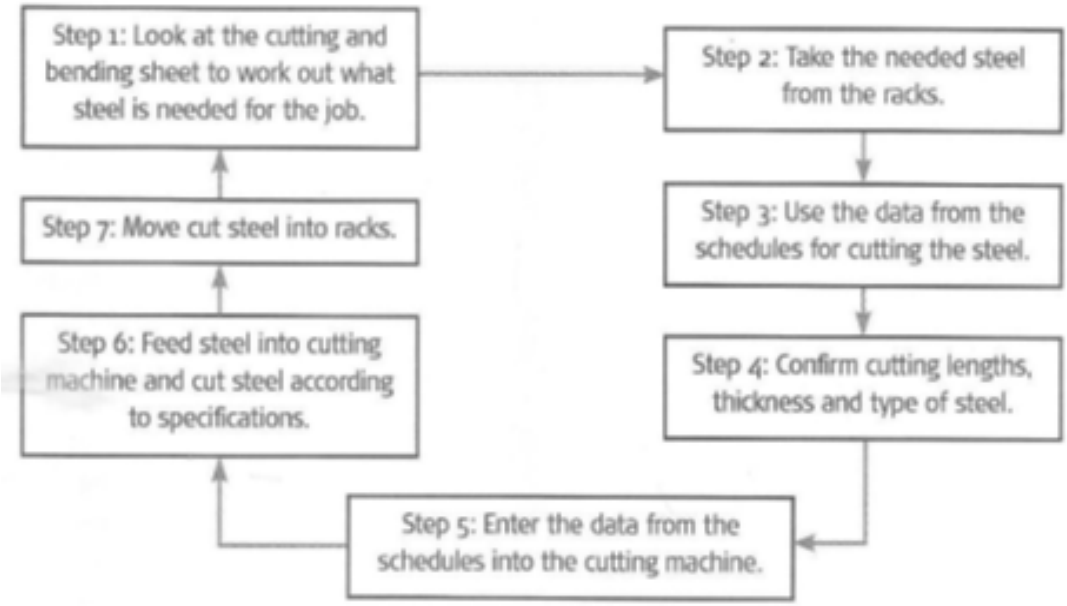

(7)

4.3
- Checking the condition of the cutter before cutting the steel
- Following the steel-cutting procedures
- Checking all the required documents
- Checking the machinery and equipment that will be used to cut the steel (4)

4.4
- Following the work plan and steel lists for the job
- Setting out the work area by following the engineering drawing
- Using hand and powers tools to cut and bend bars or mesh
- Tying the reinforcing bars together with wire, clips or welds to build up cages or sections
- Fixing the formwork used to hold setting concrete in place
- Joining cages and sections
- Fixing steel to concrete bases (7)

4.5 To keep the reinforcing bars firmly in place and to keep them at the right cover distance (2)

4.6
- It will stop the bond between steel and concrete.
- It will make the reinforcing concrete weaker. (2)

[25]

TOTAL: 100

Copyright reserved