higher education & training

Department:
Higher Education and Training
REPUBLIC OF SOUTH AFRICA

NATIONAL CERTIFICATE (VOCATIONAL)

CIVIL AND STRUCTURAL STEEL WORK DETAILING (CAD COMPONENT)

NQF LEVEL 3

(Second paper)

(12050633)

17 November 2023 (Y-paper)
13:00–15:00

REQUIREMENTS: **Hot-rolled structural steel sections (BOE 8/2)**
A4 drawing sheet

Drawing instruments and nonprogrammable calculators may be used.

This question paper consists of 5 pages and a diagram sheet.

123Q2N2317

Copyright reserved

DEPARTMENT OF HIGHER EDUCATION AND TRAINING
REPUBLIC OF SOUTH AFRICA

NATIONAL CERTIFICATE (VOCATIONAL)
CIVIL AND STRUCTURAL STEEL WORK DETAILING (CAD COMPONENT)
NQF LEVEL 3
(Second paper)
TIME: 2 HOURS
MARKS: 75

INSTRUCTIONS AND INFORMATION

1. Answer all the questions.
2. Read all the questions carefully.
3. Number the answers according to the numbering system used in this question paper.
4. Start each section on a new page.
5. Use only a black or blue pen.
6. Use one side of the drawing sheet.
7. Use an A4 drawing sheet.
8. A 15 mm border must be drawn around the drawing sheet.
9. Use your own discretion where applicable.
10. A balanced layout is very important and candidates will be penalised for poor planning.
11. Work neatly and legibly.

Copyright reserved

QUESTION 1: REINFORCED CONCRETE DETAILING

1.1 A rectangular concrete column of 400 mm by 200 mm with six Y20 longitudinal bars and R8 binders at 160 mm centre needs to be constructed.

To scale 1:5, draw a vertical longitudinal section and a horizontal cross section through the column to show the constructional details.

Main RS bars (column) – 6Y16
Rectangular binders – R08–200
Concrete cover – 50 mm

Show at least 500 mm of the length of the column and label the drawings.

1.1.1 Draw a vertical longitudinal section. (10)

1.1.2 A horizontal cross section through the column. (10)

1.2 Pile footing deliver a large load to individual piles. The piles transfer the forces to lower levels in the soil by means of friction between the soil and pile surface and/or end bearing.

Use a scale of 1:20 to draw the typical layout of a pile footing using the following data:

Two piles	Ø100 mm
Column	Ø500 mm by 500 mm high
Top soil	1 metre
Soft stratum	3 metre
Bearing stratum	Any suitable size
Pile cap/foundation	1 000 mm wide × 300 mm high
Pile centre to centre	500 mm

(15)
[35]

Copyright reserved

QUESTION 2: STRUCTURAL STEEL WORK DETAILING

2.1 A compound beam is made up as shown in FIGURE 1 below. A rolled steel channel section of 240 × 85 × 33,2 Kg /m is welded to a rolled steel I – beam (parallel flange) of 406 × 178 × 62,7 kg/m.

Consult the steel tables for additional information and use a scale 1:5 to draw a compound beam using the approximate method (true profile).

Do not copy the given view. (10)

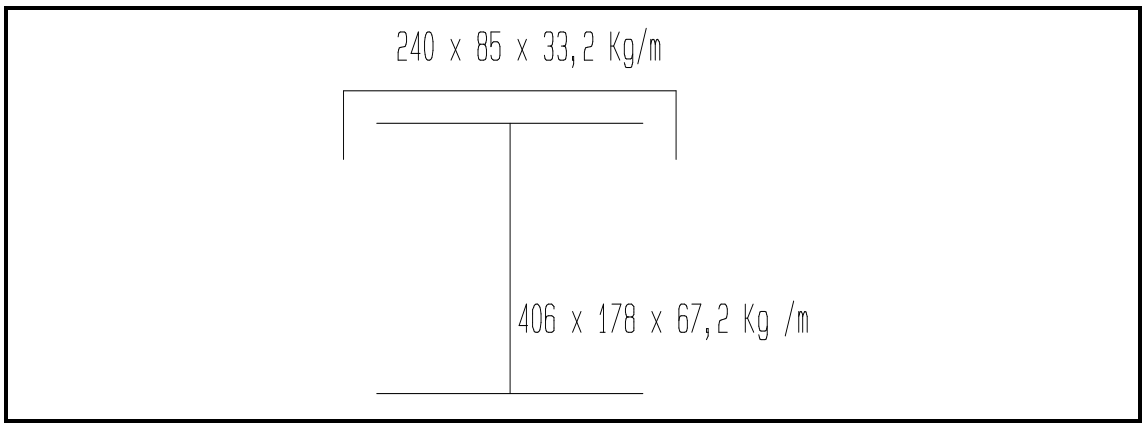

FIGURE 1

2.2 A simple column base is shown FIGURE 2, DIAGRAM SHEET 1 (attached).

Do not copy the given view. Use a scale of 1:5 to draw the following detailed view in first angle orthographic projection of using CAD:

Stanchion (Column)	406 × 178 × 53,8 kg/m Parallel flange
Base plate	600 mm × 600 mm × 20 mm
Gusset plate	400 × 2 10 × 10 mm. Gusset has two equal sides parallel but perpendicular to the base side.
Holes	Ø20 mm holes, 35 mm from the edges at the corners
	Add your own size, if not given

2.2.1 Front view (5)

2.2.2 Top view (5)

[20]

QUESTION 3: STRUCTURAL STEEL WORK DETAILING

FIGURE 3, DIAGRAM SHEET 1 (attached), shows a line diagram of a typical welded latticed girder.

Draw, to scale 1:5, typical details of the following:

3.1 Detail A

3.2 Detail B

3.3 Detail C

SPECIFICATIONS:

Top and bottom booms : Rolled steel angle profile, 120 × 120 × 10
All internal members : Rolled steel angle profile, 90 × 90 × 8
All gusset plates are 10 mm
Do not insert any dimensions
Information not given is left to your own discretion

[20]

TOTAL: 75

Copyright reserved

DIAGRAM SHEET 1

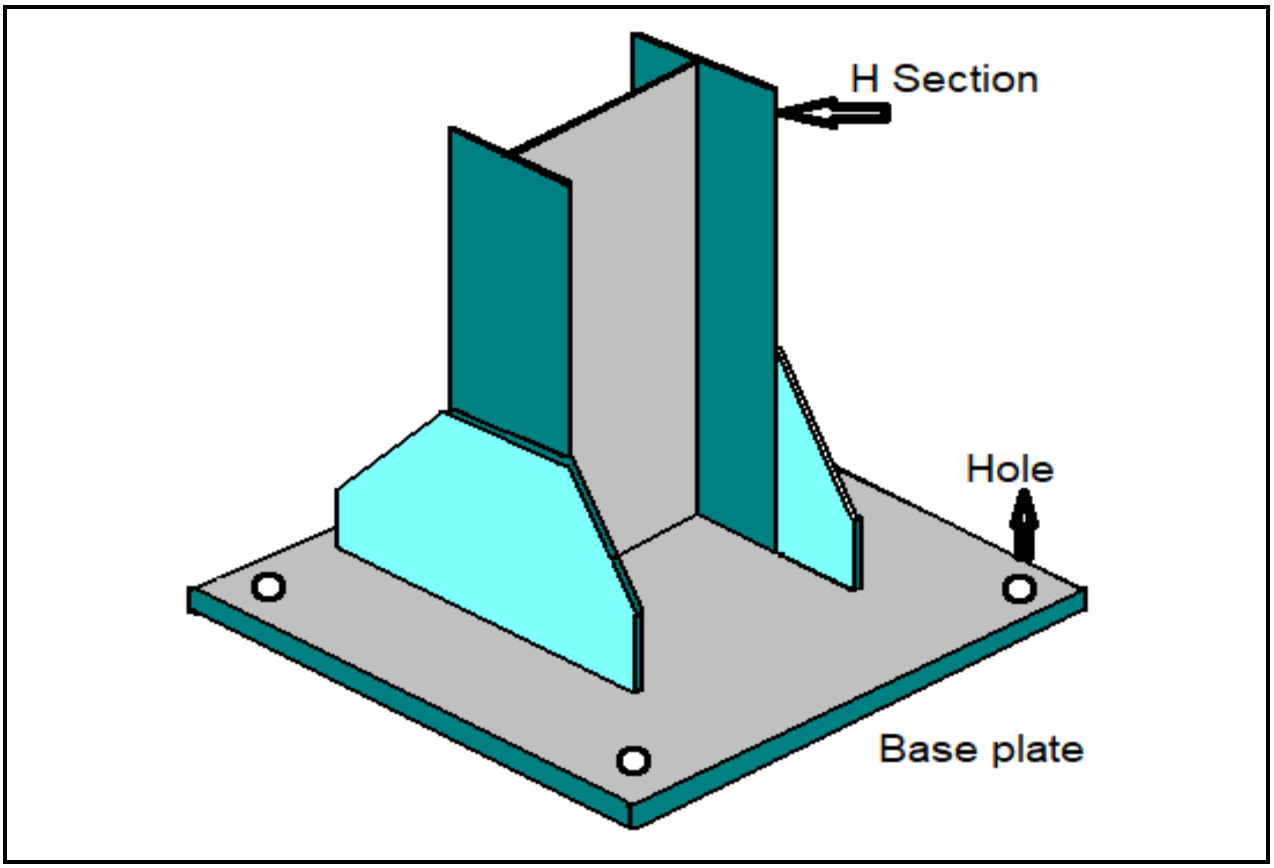

FIGURE 2

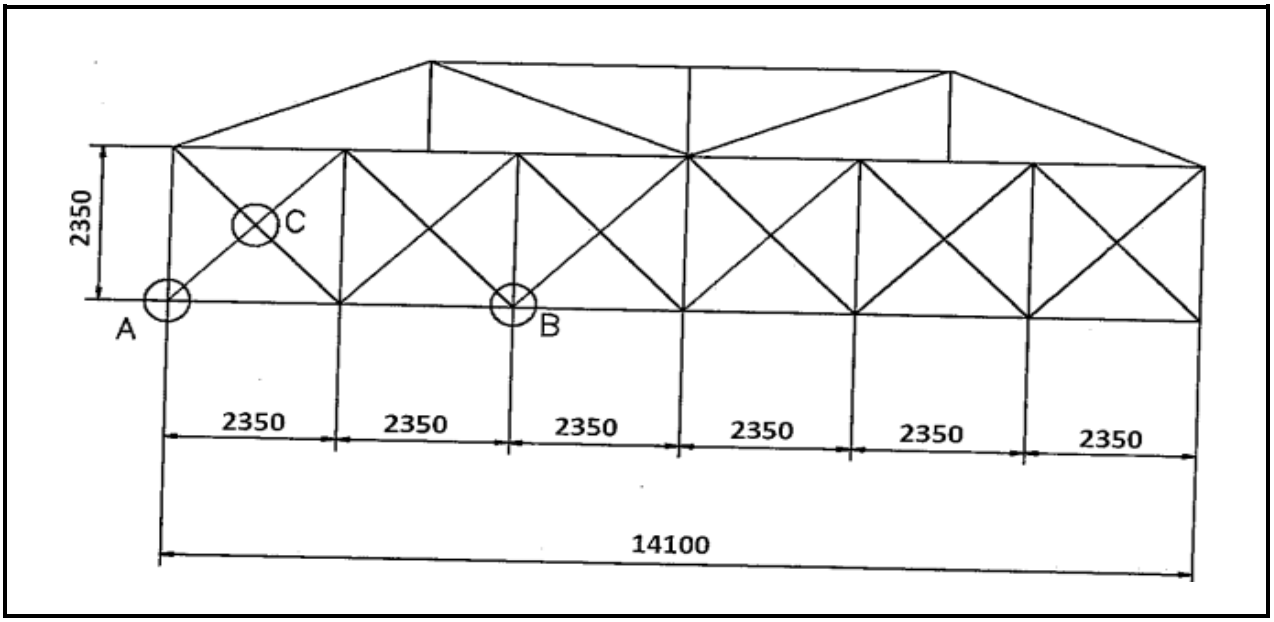

FIGURE 3

Copyright reserved