higher education & training

Department:
Higher Education and Training
REPUBLIC OF SOUTH AFRICA

MARKING GUIDELINE

NATIONAL CERTIFICATE (VOCATIONAL)

CIVIL AND STRUCTURAL STEELWORK DETAILING L3

(Second paper)

NQF LEVEL 3

08 November 2022

This marking guideline consists of 6 pages.

Copyright reserved

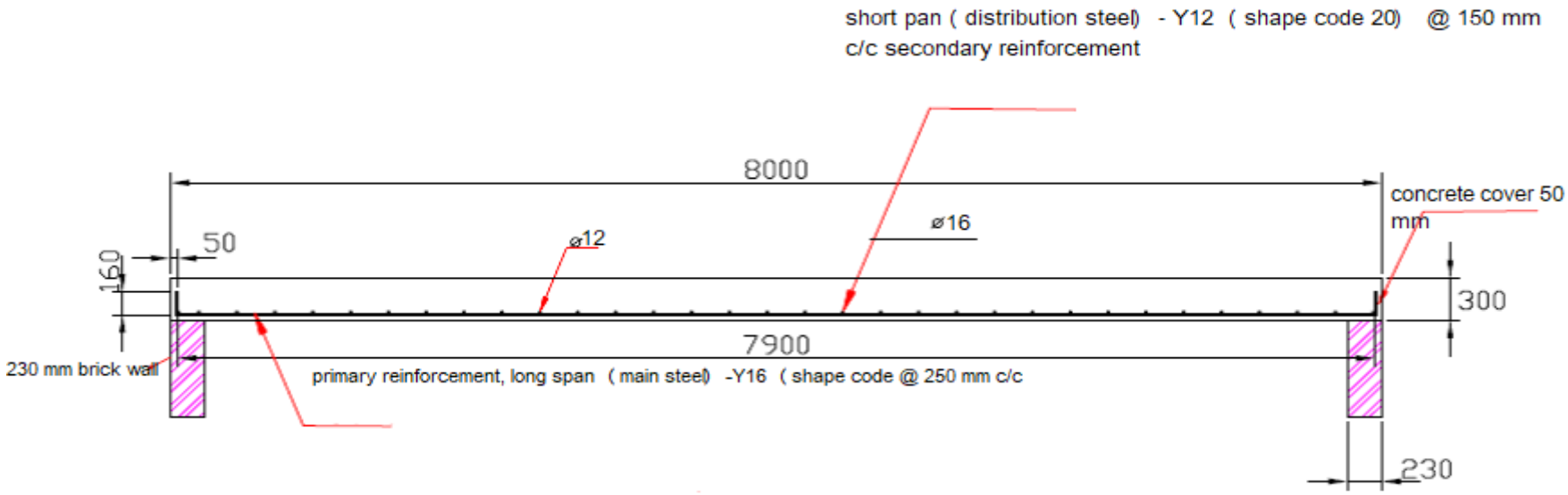

FIGURE 1

Question 1.1 Beam Mark allocation	
Correct interpretation	7
Accuracy	1
Dimensions	3 (½ each)
Labelling	4
Neatness	1
Title	1
Scale	1
Line work	2
TOTAL	**20**

Copyright reserved

1.2

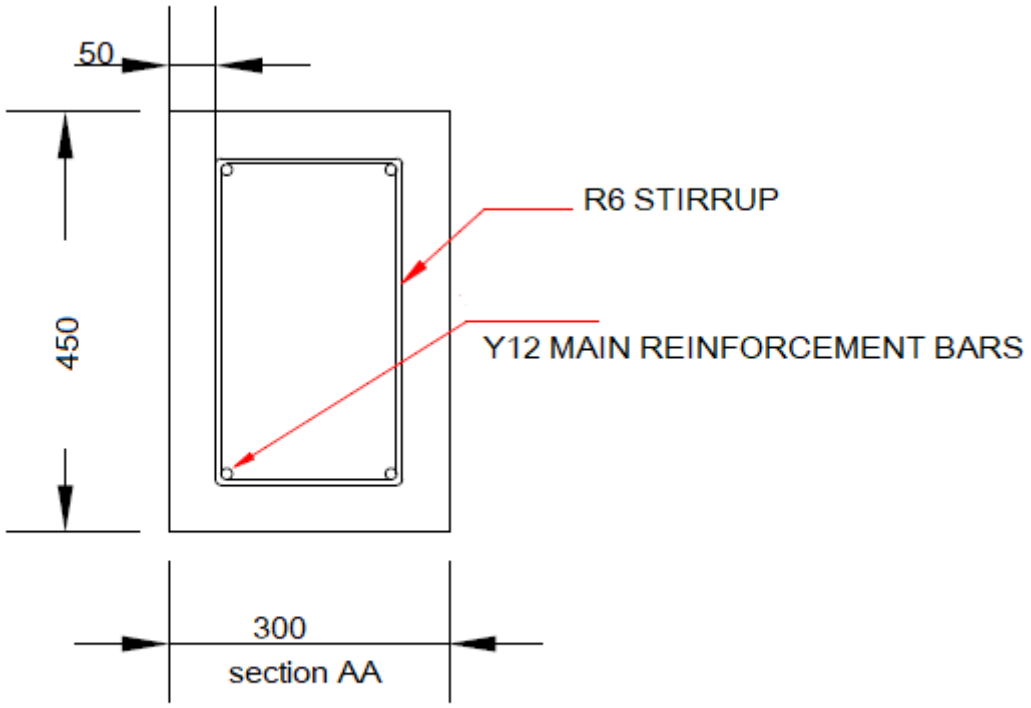

CROSS SECTION OF CONCRETE BEAM
SCALE 1:5

FIGURE 2

MARK ALLOCATION	
Correct scale	4
Correct drawing detail (channel)	2
Linework	2
Essential dimensions	2
TOTAL	**10**

[30]

Copyright reserved

QUESTION 2: STRUCTURAL STEELWORKDETAILING AND SPECIFICATIONS

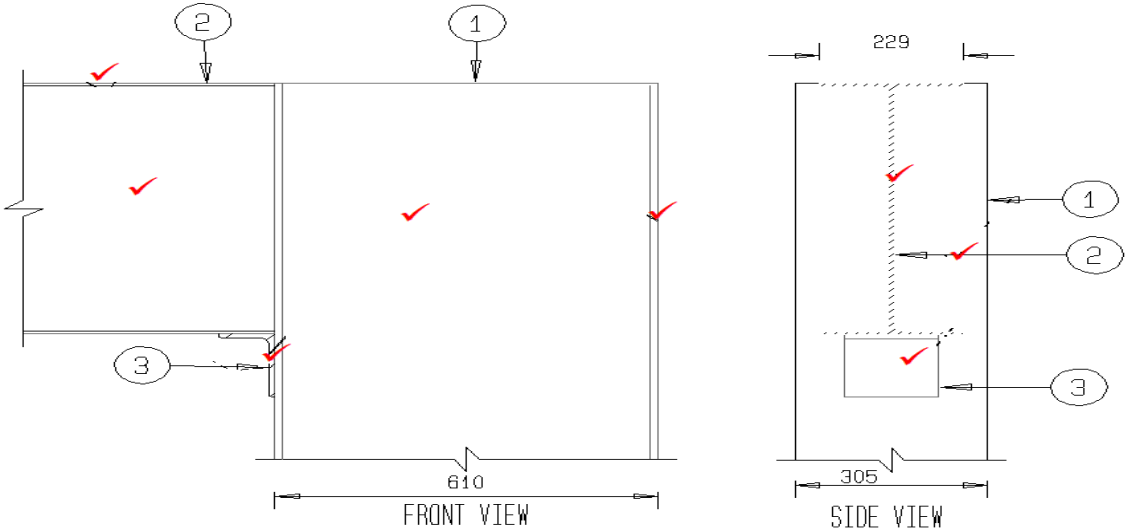

1. 610 x 305 x 149kg/m. PF
2. 610 x 229 x 101kg/m. PF
3. 150 x 90 x 18.2kg/m Unequal legs

MARKS 8

2.2.1 MARK ALLOCATION **(Front view)**	
Correct scale	1
Correct drawing detail (channel)	5
Linework	2
Essential dimensions	2
TOTAL	**10**

2.2.2 MARK ALLOCATION **(side view)**	
Correct scale	1
Correct drawing detail (channel)	5
Linework	2
Essential dimensions	2
TOTAL	**10**

Copyright reserved

2.2

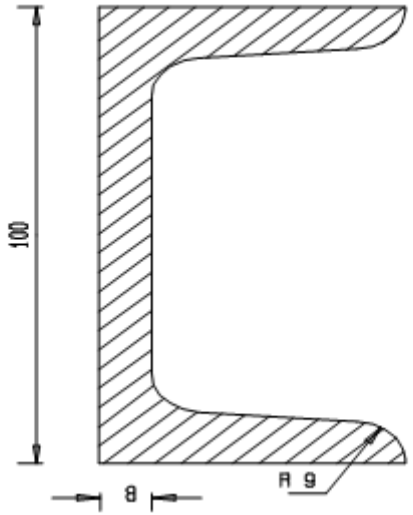

CHANNEL BEAM

MARK ALLOCATION	
Correct scale	4
Correct drawing detail (channel)	2
Line work	2
Essential dimensions	2
TOTAL	**10**

Copyright reserved

QUESTION 3: STRUCTURAL STEELWORK DETAILINGS

3.1 Detail A

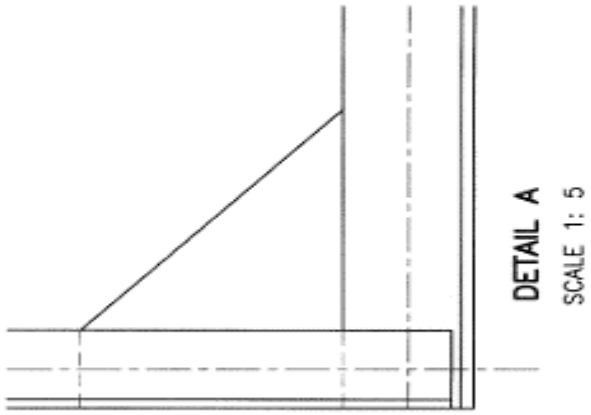

Detail A MARK ALLOCATION	
Correct scale	1
Steel detailing	3
Line work	1
Neatness	1
TOTAL	**5**

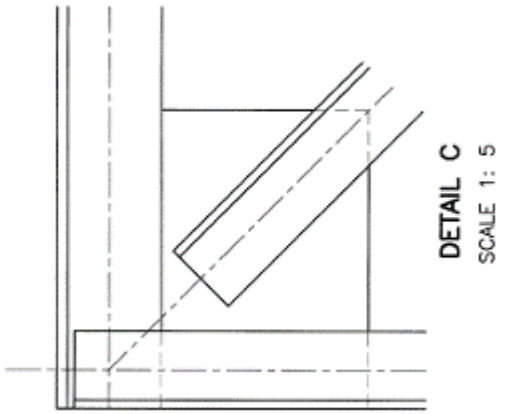

Detail C MARK ALLOCATION	
Correct scale	1
Steel detailing	3
Line work	1
Neatness	1
TOTAL	**5**

TOTAL: 75

Copyright reserved