higher education & training

Department:
Higher Education and Training
REPUBLIC OF SOUTH AFRICA

NATIONAL CERTIFICATE (VOCATIONAL)

CIVIL AND STRUCTURAL STEEL WORK DETAILING

NQF LEVEL 3

(First paper)

(12050663)

16 November 2023 (Y-paper)
13:00–15:00

REQUIREMENTS: Hot-rolled structural steel sections (BOE 8/2)
A4 drawing sheet

Drawing instruments and nonprogrammable calculators may be used.

This question paper consists of 5 pages and 2 addenda.

053Q1N2316

Copyright reserved

DEPARTMENT OF HIGHER EDUCATION AND TRAINING
REPUBLIC OF SOUTH AFRICA

NATIONAL CERTIFICATE (VOCATIONAL)
CIVIL AND STRUCTURAL STEEL WORK DETAILING
NQF LEVEL 3
(First paper)
TIME: 2 HOURS
MARKS: 75

INSTRUCTIONS AND INFORMATION

1. Answer all the questions.
2. Read all the questions carefully.
3. Number the answers according to the numbering system used in this question paper.
4. Start each question on a new page.
5. Rule off across the page on completion of each question.
6. ADDENDUM B must be attached with the ANSWER SHEET.
7. Use only a black or blue pen.
8. Write neatly and legibly.

Copyright reserved

QUESTION 1: GENERAL

Choose a term from COLUMN B that matches a description in COLUMN A. Write only the letter (A–O) next to the question number (1.1.1 – 1.1.15) in the ANSWER BOOK.

COLUMN A		COLUMN B	
1.1	retaining wall	A	The point at which a material begins to deform permanently
1.2	formwork	B	Made liquid by heating
1.3	stirrup	C	Thin steel bars that are welded together to make a crisscross pattern
1.4	shutter	D	Temporary structure or mould into which the newly mixed concrete is placed and compacted to harden
1.5	mesh	E	Pieces of plate at intersections to facilitate a connection between members
1.6	yield strength	F	The spacing between the centre lines of holes in the longitudinal direction of a member
1.7	embedded	G	Individual pieces of timber, plywood or steel used to make formwork
1.8	butt welding	H	A short length of angle or channel section welded or bolted to a steel member enabling it to be fastened to another member
1.9	flux	I	Beam manufactured from plate material and used for large pans
1.10	molten	J	Fixed or set securely or deeply into the cement or concrete
1.11	gusset plate	K	Freestanding wall that is used to hold back soil
1.12	rafter	L	Welded joints in which pieces of metal are jointed without overlapping
1.13	girder	M	A type of reinforcing in the beams that holds rebars in place and also resists shear
1.14	cleat	N	Are the main beams supporting the roof
1.15	pitch	O	Substance used in soldering and brazing to make the metals more fusible

(15 × 1) **[15]**

QUESTION 2: REINFORCED CONCRETE DETAILING

2.1 Bending schedule is also known as the bar schedule.

Name THREE advantages of a bar bending schedule. (3 × 2) (6)

2.2 Name any THREE different types of steel reinforcement. (3)

2.3 Name FIVE different types of reinforced concrete detailing. (5)

2.4 What are steel types R and Y? (2)

[16]

QUESTION 3: STRUCTURAL STEEL WORK DETAILING

3.1 Name any FOUR types of roof sheeting. (4)

3.2 Make a freehand drawing of an N-type or Pratt truss lattice girder and label it. (5)

3.3 Name THREE advantages of portal frame construction. (6)

3.4 FIGURE 1 below shows a cross section through a concrete structure which includes:

A pile cap, rectangular column and FOUR piles. Study FIGURE 1 and complete the steel bending schedule on ADDENDUM B (attached) according to the specifications given below. (14)

NOTE: Ignore the length of each bar.

A shape-code table is given in ADDENDUM A (attached).

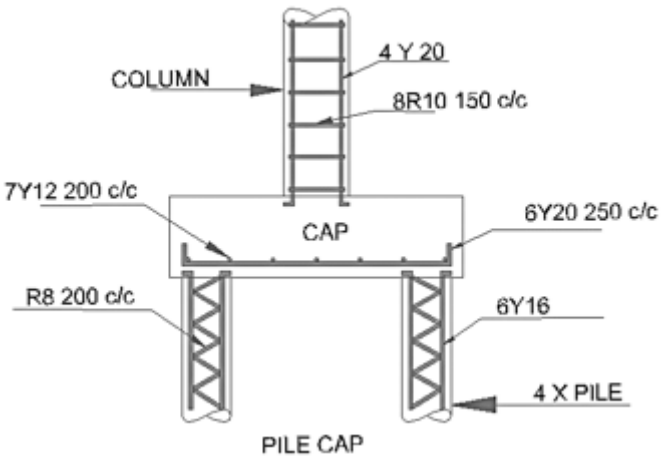

FIGURE 1

[29]

QUESTION 4: WELDING

Sketch and name FIVE different types of weld joints. (5 × 3) **[15]**

TOTAL: 75

Copyright reserved

ADDENDUM A

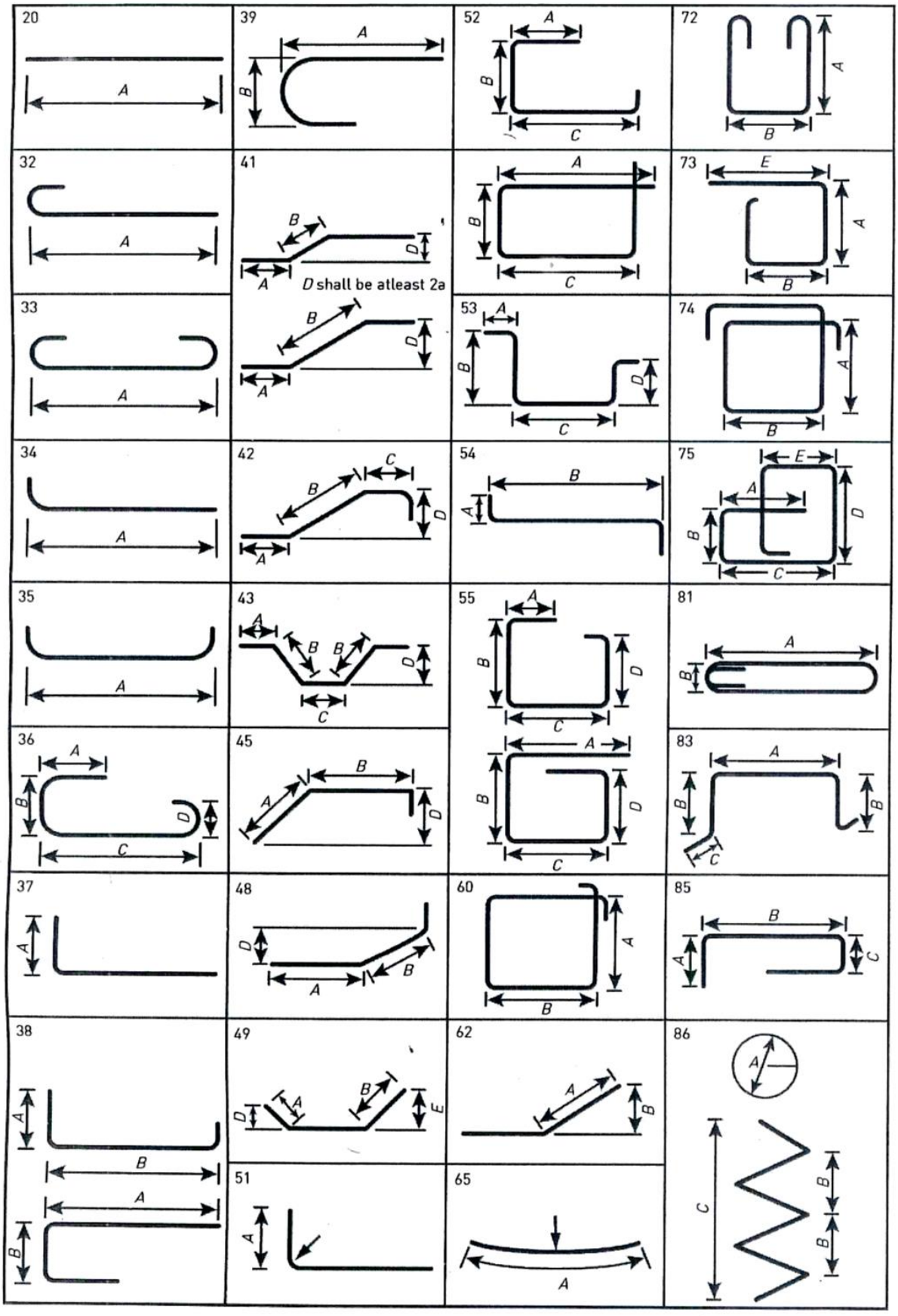

Copyright reserved

ADDENDUM B **EXAMINATION NUMBER:**

1 Member	2 Bar mark	3 Type and size	4 No. of members	5 No. in each	6 Total number	7 Length of each bar	8 Shape

Copyright reserved