higher education & training

Department:
Higher Education and Training
REPUBLIC OF SOUTH AFRICA

NATIONAL CERTIFICATE (VOCATIONAL)

CIVIL AND STRUCTURAL STEELWORK DETAILING

(First paper)

NQF LEVEL 3

(12050633)

7 November 2022 (Y-paper)
13:00-15:00

REQUIREMENTS: **A4 drawing sheets**

Hot-rolled structural steel tables (BOE 8/2)

Drawing instruments and calculators may be used

This question paper consists of 5 pages.

075Q1N2207

Copyright reserved

TIME: 2 HOURS
MARKS: 75

INSTRUCTIONS AND INFORMATION

1. Answer all the questions.
2. Read all the questions carefully.
3. Number the answers according to the numbering system used in this question paper.
4. Start each section on a new page.
5. Use only a blue or black pen.
6. Write neatly and legibly.

Copyright reserved

QUESTION 1: GENERAL

1.1 Provide a concise definition of the following terms:

1.1.1 Concrete

1.1.2 Concrete cover

1.1.3 Stirrups

(3 × 2) (6)

1.2 Name the members of the reinforced beam in FIGURE 1.

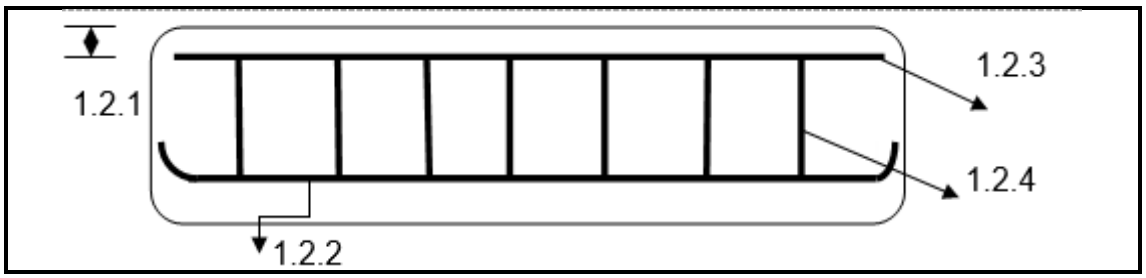

FIGURE 1

(4 × 1) (4)

1.3 List the THREE forces acting on concrete by making a freehand drawing to explain them. (6)

[16]

QUESTION 2: REINFORCED-CONCRETE DETAILING

2.1 Write out in full the following abbreviations:

2.1.1 TOG

2.1.2 ABR

2.1.3 STGD

(3 × 1) (3)

2.2 Name TWO materials used in reinforced concrete and give reasons for their use. (4)

2.3 Detailing involves schematically describing the way in which you are going to place the steel.

Briefly describe how you would orient reinforcement bars on a slab. (2)

2.4 Give TWO reasons for using steel to reinforce concrete. (2 × 2) (4)

Copyright reserved

2.5 Name any THREE types of footing that are generally used. (3)

2.6 What is the function of a structural engineer? (3)
[19]

QUESTION 3: STRUCTURAL STEELWORK DETAILING

3.1 FIGURE 2 below shows a typical sketch of a portal steelwork structure. Name the parts labelled A–J.

Example: K = Concrete foundation

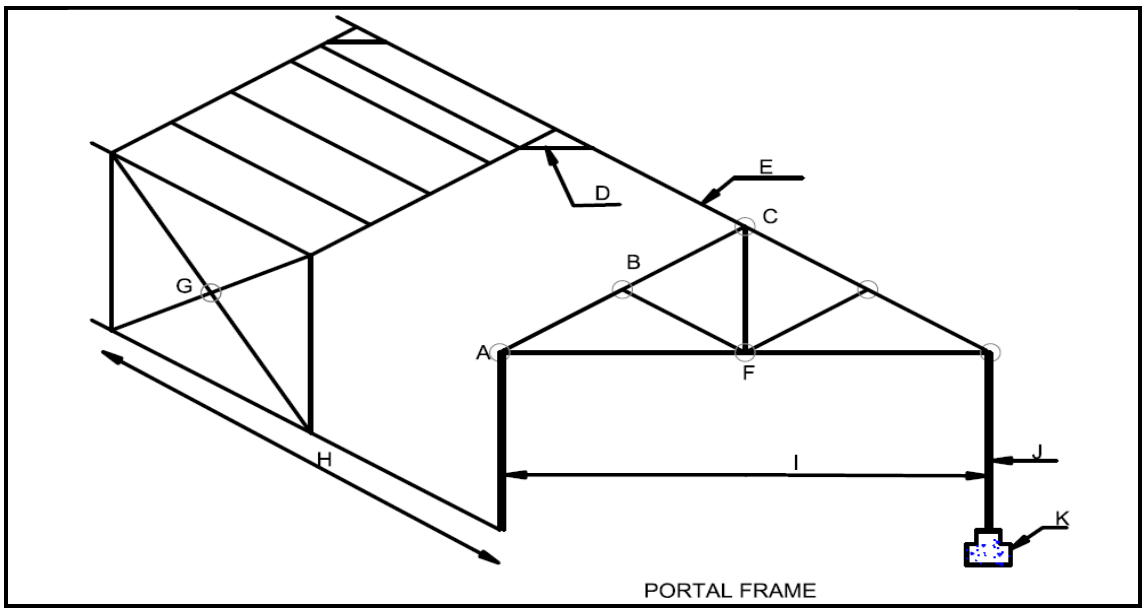

FIGURE 2

(10 × 1) (10)

3.2 Name any THREE types of roof trusses. (3)

3.3 Name TWO disadvantages of steel portal frame structures. (4)

3.4 Name THREE types of column bases used in a steel building. (3)
[20]

QUESTION 4: WELDING

4.1 Choose a description from COLUMN B that matches a/an word/item in COLUMN A. Write only the letter (A–E) next to the question number (4.1.1–4.1.5) in the ANSWER BOOK.

COLUMN A		COLUMN B	
4.1.1	Crater	A	the crust that results from the fusion of an electrode
4.1.2	Electrode	B	a straight weld with little or no side-to-side movement
4.1.3	Weld pool	C	welding rod
4.1.4	Stringer beads	D	formed at the end of a run when the weld is stopped
4.1.5	Slag	E	molten metal consisting of electrode filler and a base metal

(5 × 1) (5)

4.2 When welding you have to wear protective clothes.

Name FOUR types of clothing you have to wear when welding. (4)

4.3 The strength of a weld can be tested. A weld's strength depends on several factors.

State FOUR of them. (4)

4.4 TWO welding processes are mentioned below. What do their abbreviations stand for?

4.4.1 MMAW

4.4.2 ESW

(2 × 1) (2)

4.5 Gas metal arc welding is a very fast welding process for certain metals.

Name any FIVE metals. (5)

[20]

TOTAL: 75

Copyright reserved