higher education & training

Department:
Higher Education and Training
REPUBLIC OF SOUTH AFRICA

MARKING GUIDELINE

NATIONAL CERTIFICATE (VOCATIONAL)

ARCHITECTURAL GRAPHICS AND TECHNOLOGY

(Second paper)

NQF LEVEL 3

15 November 2022

This marking guideline consists of 7 pages.

Copyright reserved

INSTRUCTIONS TO MARKERS

1. Mark all the questions.

2. Follow the answers according to the numbering system used in this question paper.

3. Use only a red pen.

4. Put your ticks and crosses neatly and legibly.

Copyright reserved

QUESTION 1

1.1 Project activities refer to the various tasks that need to be completed by the different role players participating in a project.✓ Project activities are identified once the design is completed, for example, Concrete – formwork, reinforcement and pouring of concrete, vibrate and air or concrete floating.✓ (2)

1.2 1.2.1 Advantages:
- During meetings important information is communicated to all role-players. Meetings are the easiest form of group communication.

Disadvantages:
- Finding a suitable venue and time and getting all persons involved to attend a meeting can be problematic.

1.2.2 Advantages:
- Control over the work that is done is one of the primary responsibilities of management.

Disadvantages:
- Poor planning and incomplete project schedules.

1.2.3 Advantages:
- A cash flow statement shows monthly expenditure, accumulative expenditure, income, and so on.

Disadvantages:
- A mistake in the calculations against the bill of quantities could affect the entire project.
- Not always ready when needed at meetings. (Any 1 × 1)

1.2.4 Advantages:
- Schedules establish the sequence of events and define when each is to take place.

Disadvantages:
- Project schedules need to be updated regularly to be effective.
- Can be time consuming as schedules can be extremely complex. (Any 1 × 1)

(4 × 2) (8)

[10]

QUESTION 2

2.1 The bulk factor or floor area ratio applies to multi-storey buildings only.✓ So you do not include it for single-storey dwellings.✓ The information is obtained from the town planning department. If the bulk factor is given as 4, it means that a building may not be four times bigger than the stand.✓ In a multi-storey building it means the floor area of all floors added together.✓ (4)

2.2 Stand = 200 m²✓ × 8✓ = 1 600 m²
Coverage = 50%✓ of 200 m²✓ = 100 m²
Number of floors = 1 600/100✓ = 16 floors✓ (6)

2.3 A sewer connection in an urban area is where the municipality sewer lines are and normally a sewer connection is created for every stand either by the council or the draughts person.✓ Vital information relating to a sewer connection is the depth and position of the municipal connection.✓ (2)

2.4 A centre line is used to find the centre of different components such as walls, windows, openings, and columns. It consists of a series of alternating long and short dashes that extend at a right angle from an object.✓ A border line is a heavy line that consists of one long dash followed by two short dashes and it defines the borders of properties.✓ (2)
[14]

QUESTION 3

3.1 10 × 5 = 50 minutes✓
20 × 60 = 120 seconds✓ (2)

3.2 3.2.1 59 Cape feet x 1,033✓ = 60,947 English feet x 0,3048✓ =18,58 meters✓ (3)

3.2.2 229’8” English feet x 0,3048✓ = 70,04 meters✓ (2)

3.3 The smaller scale of the large drawings does not allow for marking dimensions on smaller features.✓ So, they provide a clear view of the components within the area of detail✓ It is important to make use of these enlarged details before attempting to erect a building.✓ (3)

3.4 3.4.1 The replacement of earth into a trench or pier excavation around and against a basement foundation.

3.4.2 Narrow strips of wood used to cover joints between boards of sheet material.

3.4.3 Concrete structure underneath the floor finishing

3.4.4 Plastic membrane sheeting fitted under roof tiles or a roof covering to assist with waterproofing.

Copyright reserved

3.4.5 The part of the building or wall that supports a superstructure.

(5 × 1) (5)

3.5
- Roof construction, which includes roof covering and pitch
- Height of the external and internal walls, as well as that of the ceiling
- Floor construction and footings
- Structural construction, including metal work, steelwork and concrete
- Any openings that need structural support, which could include concrete or laminated timber beams
- The site showing any slopes for cut-and-fill details
- Retaining walls and any encasing of sewer or drainage pipes under driveways
- Construction materials and methods to follow
- Relevant building standards, codes and regulations
- Manufacturing standards relating to fixtures and fittings
- Any engineering problems or restrictions, for example, poor soil conditions

(Any 10 × 1) (10)

3.6

(16)

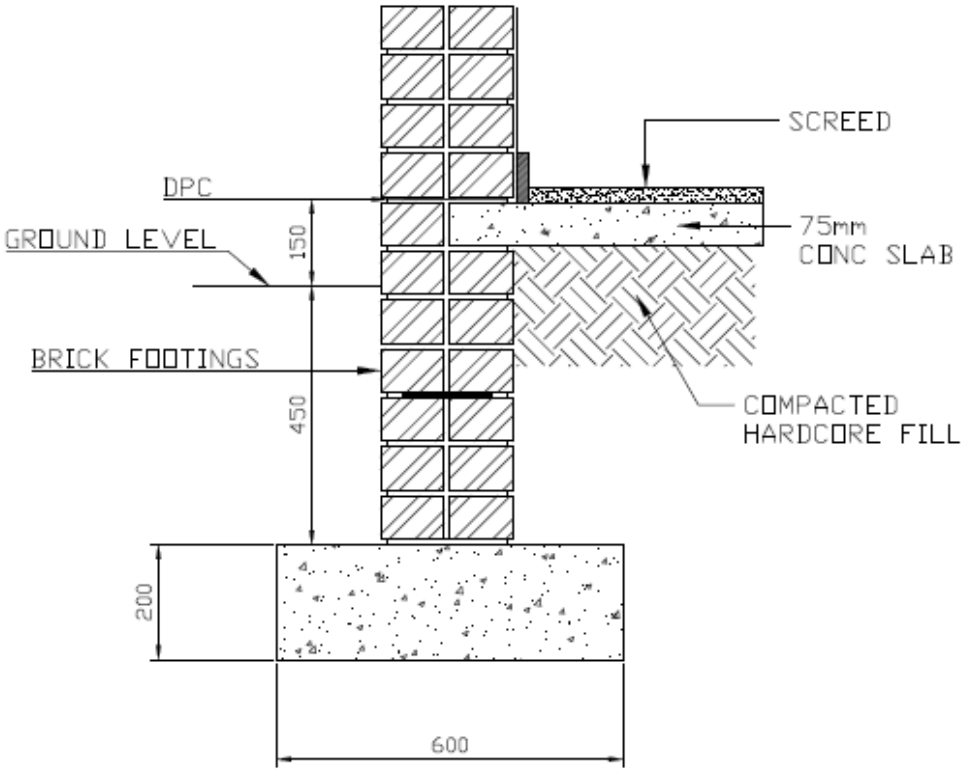

STRIP RAFT FOUNDATION

(Annotations)(10 × 1)
(Sketch)(6 × 1)

[41]

QUESTION 4

4.1 4.1.1 Truss maximum 760 mm c/c ✓and 38 mm × 38 mm battens✓
4.1.2 Truss maximum 1 500 mm c/c ✓and 50 mm × 76 mm purlins✓
(2 × 2) (4)

4.2 4.2.1
- Quick and easy to construct
- Especially suited for mass housing
- Inexpensive (Any 2 × 1)

4.2.2
- Aesthetically pleasing
- Very strong
- Roof strength is in its design (Any 2 × 1)

4.2.3
- Inexpensive
- Quick and easy to construct

4.2.4
- Easy to erect.
- Does not require many fittings such as brackets and bolts.
- Because it is the traditional way of building, the building technique is passed on from one generation to the next. (Any 2 × 1)

4.2.5
- Inexpensive
- Quick and easy to construct

(5 × 2) (10)

4.3 4.3.1 Vertical web connecting the apex of the truss to the bottom chord.

4.3.2 When a building has a sloping roof.

4.3.3 These are pieces of timber that make up the roof.

4.3.4 Permanent loads on the roof such as roof tiles, ceilings, geyser, and the weight of the trusses.

4.3.5 ONE of the main timber members that forms the outline of a truss.
(5 × 1) (5)

4.4 Flashing shall be used when a roof abuts onto a wall or around any projection through the roof covering or at any other place where it is deemed necessary by the local authority.✓ Any flashing material used shall be durable.✓ (2)

4.5
- Truss configuration
- Maximum permissible rafter spans
- Timber size requirements
- Bolted connections
- Maximum and minimum allowable slopes (Any 4 × 1) (4)

[25]

QUESTION 5

5.1 True
5.2 True
5.3 True
5.4 False
5.5 True
5.6 False
5.7 True
5.8 True
5.9 True
5.10 False

(10 × 1) **[10]**

TOTAL: 100

Copyright reserved