higher education & training

Department:
Higher Education and Training
REPUBLIC OF SOUTH AFRICA

MARKING GUIDELINE

NATIONAL CERTIFICATE (VOCATIONAL)

ARCHITECTURAL GRAPHICS AND TECHNOLOGY

(First paper)

NQF LEVEL 3

20 November 2023

This marking guideline consists of 19 pages.

Copyright reserved

QUESTION 1

QUESTION 1.1 RUBRIC			
PART OF DRAWING	**MARKING CRITERIA**	**POSSIBLE MARK**	**REMARKS**
Concrete stepped footing and size	Correctness	2	
	Dimensioning	1	Reinforced beam
	Hatching	1	Concrete beam
Foundation wall, hard core fill, 75 mm surface bed and thicknesses	Correctness	4	Compacted hardcore, surface bed and thicknesses
	Hatching	3	Foundation wall, slab and hardcore fill
	Labelling	3	
Wall, internal plaster, skirtings	Correctness	3	
	Hatching	2	
	Labelling	1	
20 mm screed, skirting	Correctness	2	
	Labelling	2	
	Subtotal	24	Overall correctness
	Divide by	3	
	Correctness	**8**	
	Line work	**2**	
	Accuracy	**2**	
	Title and scale	**1**	
	Balanced layout and Neatness	**2**	
	TOTAL	**15**	

NOTE: No marks should be allocated for any part of the drawing in the incorrect position, other than the marks allocated for the hatching of that component.

If a drawing is completely incorrect, marks should be allocated for neatness and the correct title and scale. **[15]**

Copyright reserved

SUMMARY QUESTION 1.1

Marking criteria	Possible mark	Marker	Internal moderator	External moderator
Correctness	11			
Hatching	6			
Labels	6			
Dimensions	1			
Subtotal	**24**			
Divide by	**3**			
Correctness	**8**			
Line work	**2**			
Accuracy	**2**			
Title and scale	**1**			
Balanced layout and neatness	**2**			
TOTAL	**15**			

Copyright reserved

QUESTION 1.1:

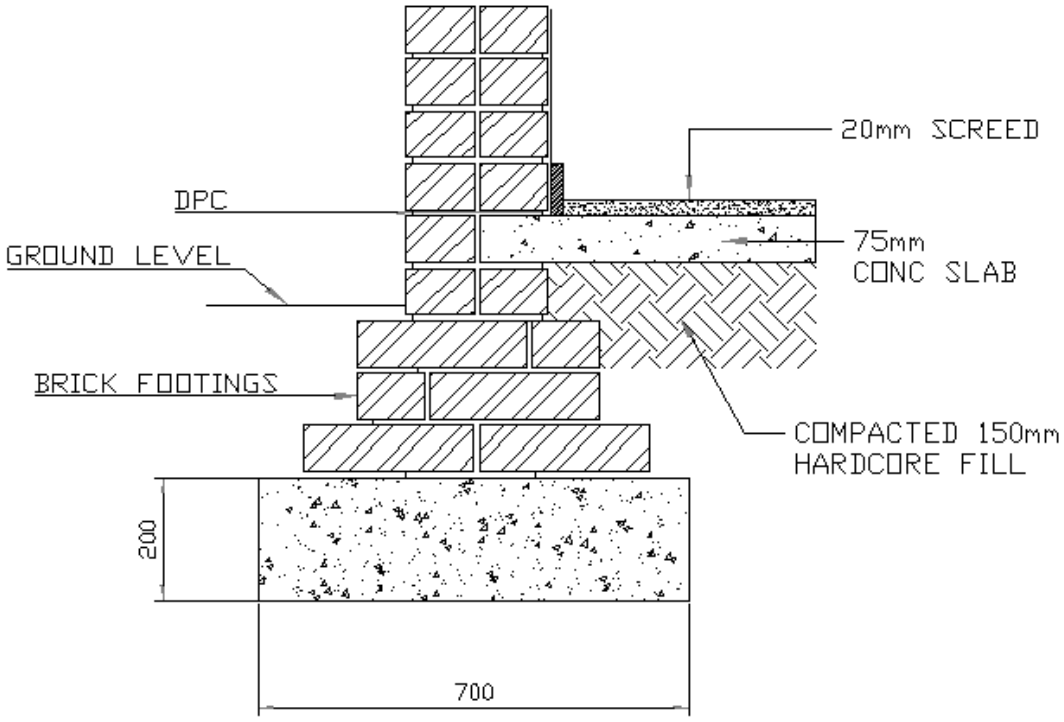

STEPPED FOUNDATION
SCALE 1:10

QUESTION 2.1 RUBRIC			
PART OF DRAWING	**MARKING CRITERIA**	**POSSIBLE MARK**	**REMARKS**
Steel window frame, concrete window sill, inner and outer wall leaf.	Correctness	4	
	Hatching	2	
	Labelling	3	
DPC below and above window frame, lintels, wall ties, brick force	Correctness	4	DPC vertical and horisontal
	Dimensions	0	
	Labelling	5	
	Subtotal	18	Overall correctness
	Divide by	1.8	
	Correctness	**10**	
	Line work	**2**	
	Accuracy	**1**	
	Title and scale	**1**	
	Balanced layout and neatness	**1**	
	TOTAL	**15**	

NOTE: No marks should be allocated for any part of the drawing in the incorrect position, other than the marks allocated for the hatching of that component.

If a drawing is completely incorrect, marks should be allocated for neatness and the correct title and scale. **[15]**

Copyright reserved

SUMMARY QUESTION 2.1

Marking criteria	Possible mark	Marker	Internal moderator	External moderator
Correctness	8			
Hatching	2			
Labels	8			
Dimensions	0			
Subtotal	**18**			
Divide by	**1.8**			
Correctness	**10**			
Line work	**2**			
Accuracy	**1**			
Title and scale	**1**			
Balanced layout and Neatness	**1**			
TOTAL	**15**			

QUESTION 2.1

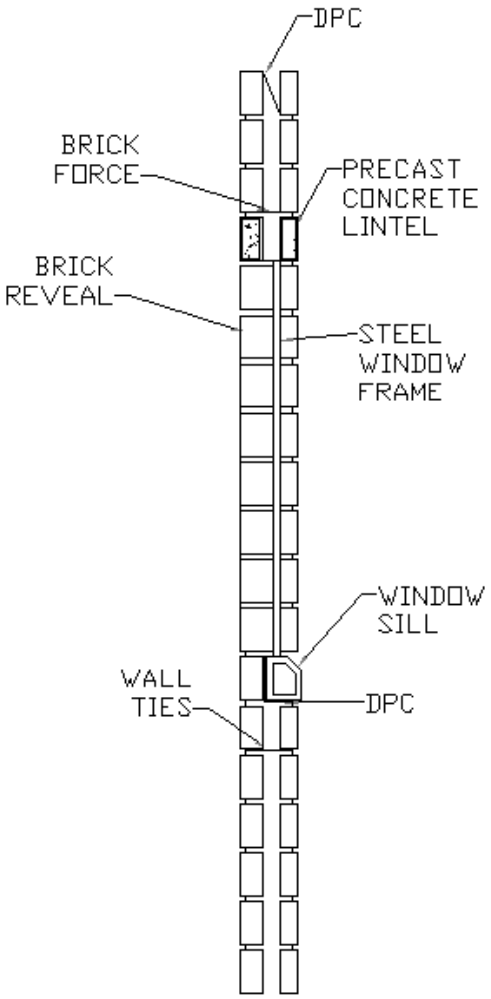

STEEL WINDOW SECTION
SCALE 1:10

QUESTION 3.1 RUBRIC			
PART OF DRAWING	**MARKING CRITERIA**	**POSSIBLE MARK**	**REMARKS**
Concrete raft, excavation depth, concrete raft thickness, profile with reinforcement	Correctness	5	
	Dimensioning	3	
	Hatching	2	
DPC, DPM, compaction layers, sand binding layer, screed	Correctness	7	Compacted hardcore, sand layer and screed
	Hatching	6	
	Labelling	5	
Wall, filled cavity, wall ties, weeping hole	Correctness	6	
	Hatching	3	
	Labelling	2	Weeping hole, wall ties
	Subtotal	39	Overall correctness
	Divide by	3	
	Correctness	**13**	
	Line work	**5**	
	Accuracy	**3**	
	Title and scale	**2**	
	Balanced layout and Neatness	**2**	
	TOTAL	**25**	

NOTE: No marks should be allocated for any part of the drawing in the incorrect position, other than the marks allocated for hatching.

If a drawing is completely incorrect, marks should be allocated for neatness and the correct title and scale. **[20]**

SUMMARY QUESTION 3.1

Marking criteria	Possible mark	Marker	Internal moderator	External moderator
Correctness	18			
Hatching	11			
Labels	7			
Dimensions	3			
Subtotal	**39**			
Divide by	**3**			
Correctness	**13**			
Line work	**5**			
Accuracy	**3**			
Title and scale	**2**			
Balanced layout and neatness	**2**			
TOTAL	**25**			

QUESTION 3.1

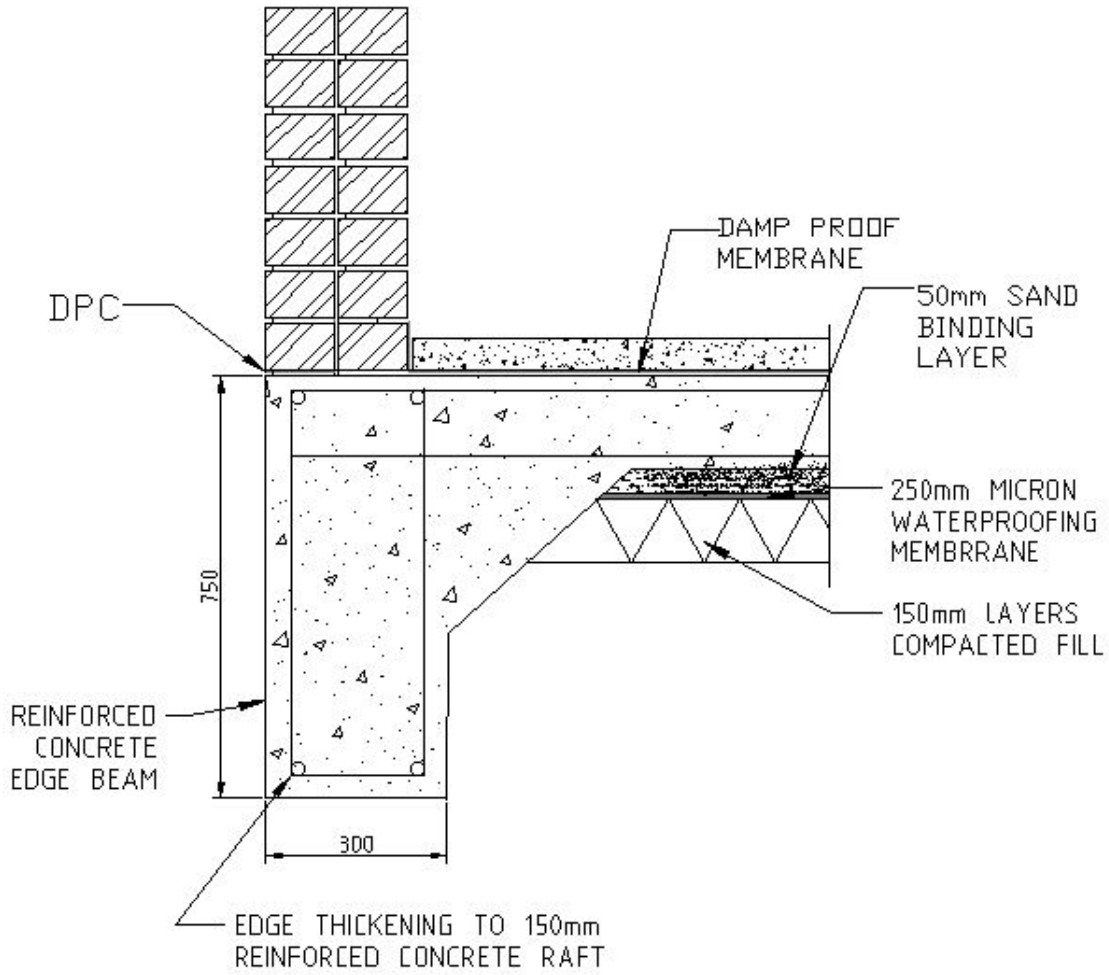

SECTION THROUGH A WAFFLE RAFT FOUNDATION
WITH AN EDGE BEAM
SCALE 1:10

Copyright reserved

QUESTION 4.1 RUBRIC			
PART OF DRAWING	**MARKING CRITERIA**	**POSSIBLE MARK**	**REMARKS**
Ridge profile, tiles, ridge board, rafter, battens	Correctness	3	
	Labelling	5	
	Sizes	2	Battens, rafter, ridge board, wooden roll
Galvanised-iron bale tack, sheet lead ridging, wooden role as indicated on ridge board	Correctness	2	
	Hatching	1	
	Labelling	2	
	Subtotal	15	
	Divide by	1.5	
	Correctness	**10**	
	Line work	**2**	
	Accuracy	**1**	
	Title and scale	**1**	
	Balanced layout and neatness	**1**	
	TOTAL	**15**	

NOTE: No marks should be allocated if any part of the drawing is in the incorrect position, other than the marks allocated for hatching.

If a drawing is completely incorrect, marks should be allocated for neatness and the correct title and scale. **[15]**

Copyright reserved

SUMMARY QUESTION 4.1

Marking criteria	Possible mark	Marker	Internal moderator	External moderator
Correctness	5			
Hatching	1			
Sizes	2			
Labels	7			
Subtotal	**15**			
Divide by	**1.5**			
Correctness	**10**			
Line work	**2**			
Accuracy	**1**			
Title and scale	**1**			
Balanced layout and neatness	**1**			
TOTAL	**15**			

QUESTION 4.1

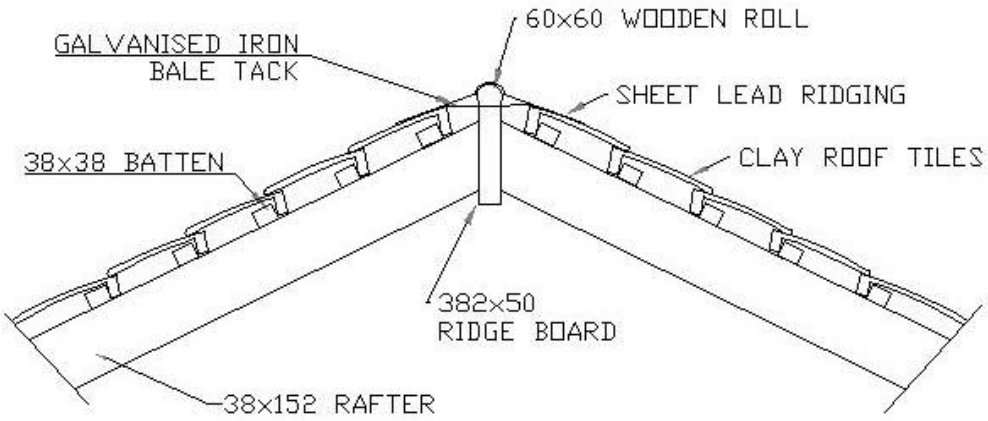

RIDGE DETAIL OF TILE ROOF

QUESTION 4.2 RUBRIC			
PART OF DRAWING	**MARKING CRITERIA**	**POSSIBLE MARK**	**REMARKS**
Fink truss: Layout and engineering plates.	Correctness	4	Rafters, tie beams, engineering nail plates and web members
	Labelling	10	
	Subtotal	14	Overall correctness
	Divide by	1.4	
	Correctness	**10**	
	Line work	**2**	
	Accuracy	**1**	Good proportion
	Title	**1**	
	Balanced layout and Neatness	**1**	
	TOTAL	**15**	

NOTE: No marks should be allocated for any part of the drawing in the incorrect position other than the marks allocated for its hatching.

If the drawing is completely incorrect, marks should be allocated for neatness and the correct title and scale. **[15]**

SUMMARY QUESTION 4.2

Marking criteria	Possible mark	Marker	Internal moderator	External moderator
Correctness	4			
Labels	10			
Dimensions	0			
Subtotal	**14**			
Divide by	**1.4**			
Correctness	**10**			
Line work	**2**			
Accuracy	**1**			
Title and scale	**1**			
Balanced layout and neatness	**1**			
TOTAL	**15**			

QUESTION 4.2

FINK ENGINEERED TRUSS

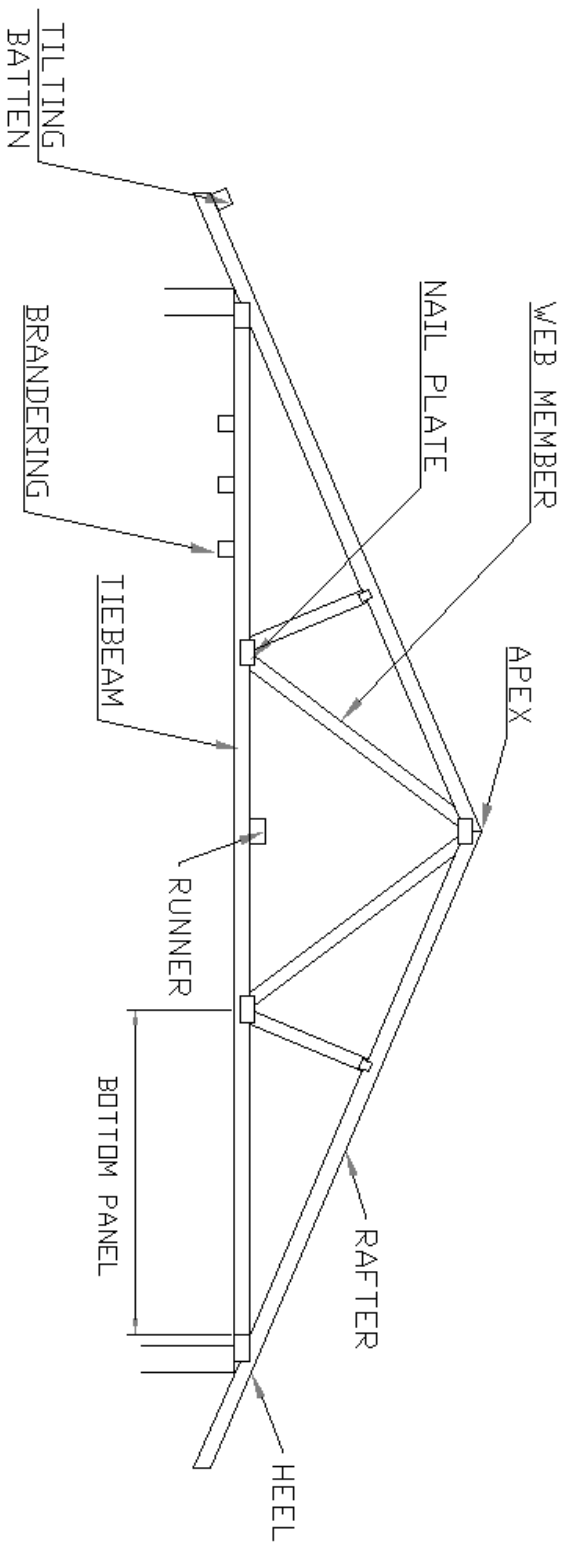

QUESTION 5.1 RUBRIC			
PART OF DRAWING	**MARKING CRITERIA**	**POSSIBLE MARK**	**REMARKS**
Glass, window layout	Correctness	3	
	Hatch	0	
	Labelling	1	
Wooden window frame (Head, sash, sill)	Correctness	4	
	Hatching	0	
	Labelling	6	
	Subtotal	14	
	Divide by	1.75	
	Correctness	**8**	
	Line work	**3**	
	Accuracy	**2**	
	Title	**1**	
	Balanced layout and neatness	**1**	
	TOTAL	**15**	

NOTE: No marks should be allocated for any part of the drawing in the incorrect position other than the marks allocated for its hatching.

If the drawing is completely incorrect, marks should be allocated for neatness and the correct title and scale. **[15]**

SUMMARY QUESTION 5.1

Marking criteria	Possible mark	Marker	Internal moderator	External moderator
Correctness	7			
Hatching	0			
Labels	7			
Subtotal	**14**			
Divide by	**1.75**			
Correctness	**10**			
Line work	**2**			
Accuracy	**1**			
Title & scale	**1**			
Balanced layout and neatness	**1**			
TOTAL	**15**			

QUESTION 5.1

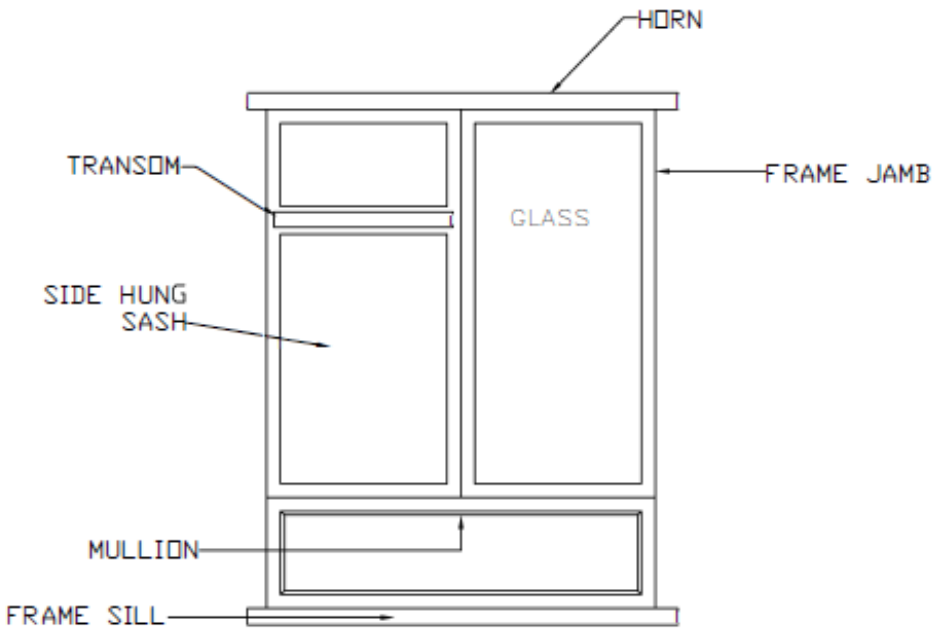

MODIFIED BS WINDOW

Copyright reserved