higher education & training

Department:
Higher Education and Training
REPUBLIC OF SOUTH AFRICA

MARKING GUIDELINE

NATIONAL CERTIFICATE (VOCATIONAL)

ARCHITECTURAL GRAPHICS AND TECHNOLOGY

(First paper)

NQF LEVEL 3

09 November 2022

This marking guideline consists of 19 pages.

Copyright reserved

QUESTION 1

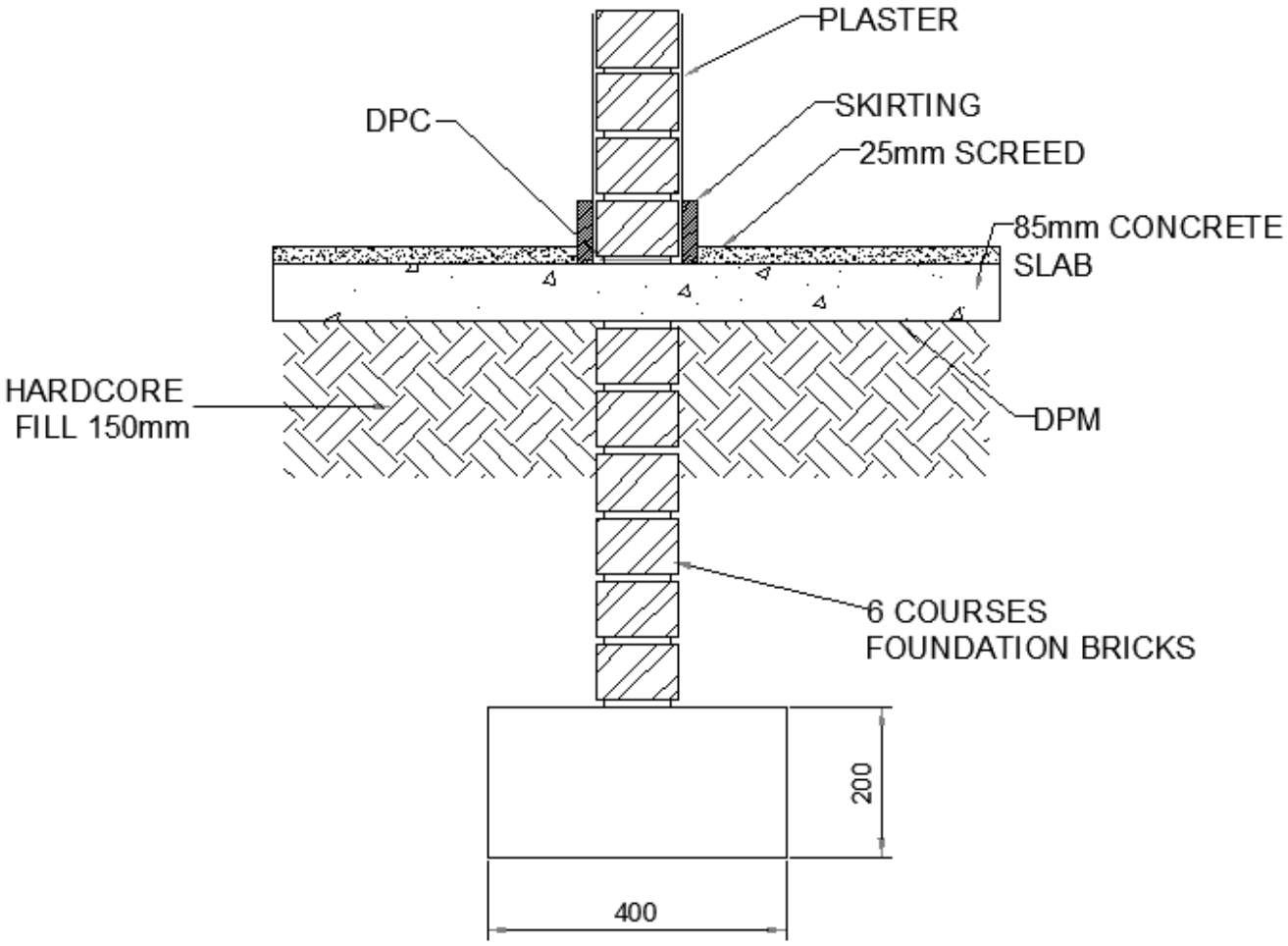

STRIP FOUNDATION
SCALE 1:10

QUESTION 1.1: RUBRIC			
PART OF DRAWING	**MARKING CRITERIA**	**POSSIBLE MARK**	**REMARKS**
Concrete footing and size	Correctness	2	
	Dimensioning	1	Reinforced beam
	Hatching	1	Concrete beam
Foundation wall, hard core fill, surface bed and thicknesses	Correctness	4	Compacted hardcore, surface bed and thicknesses
	Hatching	3	Foundation wall, slab and hardcore fill
	Labelling	3	
Wall, plaster, skirting	Correctness	3	
	Hatching	2	
	Labelling	1	
25 mm screed, skirting	Correctness	2	
	Labelling	2	
	Subtotal	24	Overall correctness
	Divided by	3	
	Correctness	**8**	
	Line work	**2**	
	Accuracy	**2**	
	Title and scale	**1**	
	Balanced layout and neatness	**2**	
	TOTAL	**15**	

NOTE: No marks should be allocated for any part in an incorrect position other than the mark allocated for hatching of a component.

If the drawing is completely incorrect, a mark should be allocated for neatness, the title and the scale. **[15]**

Copyright reserved

SUMMARY QUESTION 1

Marking criteria	Possible mark	Marker	Internal moderator	External moderator
Correctness	11			
Hatching	6			
Labels	6			
Dimensions	1			
Subtotal	**24**			
Divide by	**3**			
Correctness	**8**			
Line work	**2**			
Accuracy	**2**			
Title and scale	**1**			
Balanced layout and neatness	**2**			
TOTAL	**15**			

Copyright reserved

QUESTION 2

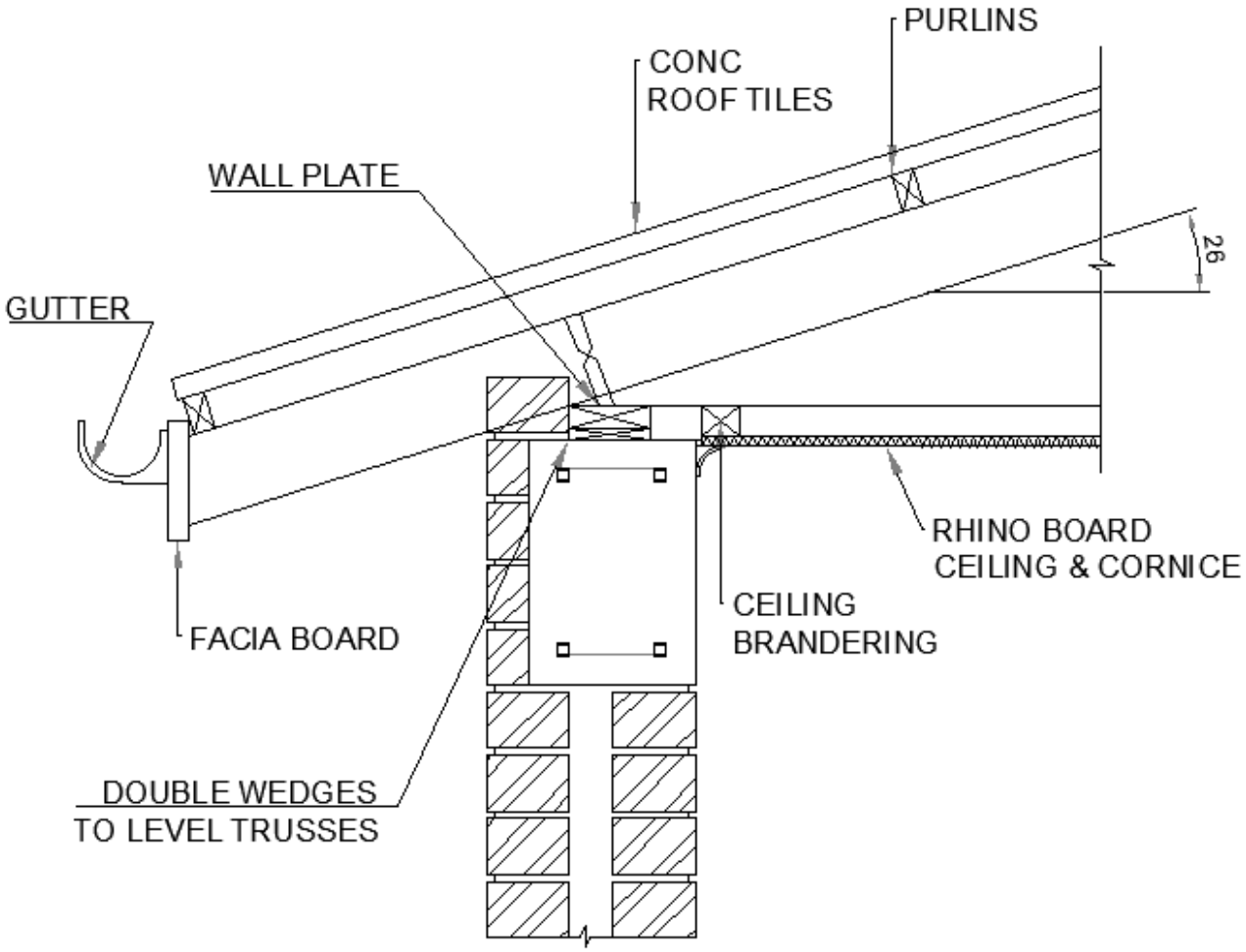

EAVE DETAIL WITH REINFORCED CONCRETE RING BEAM
SCALE 1:10

QUESTION 2.1 RUBRIC			
PART OF DRAWING	**MARKING CRITERIA**	**POSSIBLE MARK**	**REMARKS**
Rafter, tie-beam, wall plate, levelling wedges, purlins and roof tiles.	Correctness	6	
	Dimensions	1	Pitch
	Labelling	4	
Gutter, fascia, cornice, Rhino board ceiling, brandering	Correctness	5	
	Dimensions	4	
	Labelling	1	
Cavity wall, ring beam with reinforcement	Correctness	2	
	Hatching	3	
	Subtotal	26	Overall correctness
	Divided by	2.6	
	Correctness	**10**	
	Line work	**5**	
	Accuracy	**2**	
	Title and scale	**2**	
	Balanced layout and neatness	**1**	
	TOTAL	**20**	

NOTE: No marks should be allocated for any part of the drawing in the incorrect position other than the marks allocated for hatching of that component.

If the drawing is completely incorrect, marks should be allocated for neatness, the correct title and the scale. **[20]**

Copyright reserved

SUMMARY QUESTION 2

Marking criteria	Possible mark	Marker	Internal moderator	External moderator
Correctness	13			
Hatching	3			
Labels	5			
Dimensions	5			
Subtotal	**26**			
Divide by	**2.6**			
Correctness	**10**			
Line work	**5**			
Accuracy	**2**			
Title and scale	**2**			
Balanced layout and neatness	**1**			
TOTAL	**20**			

QUESTION 3

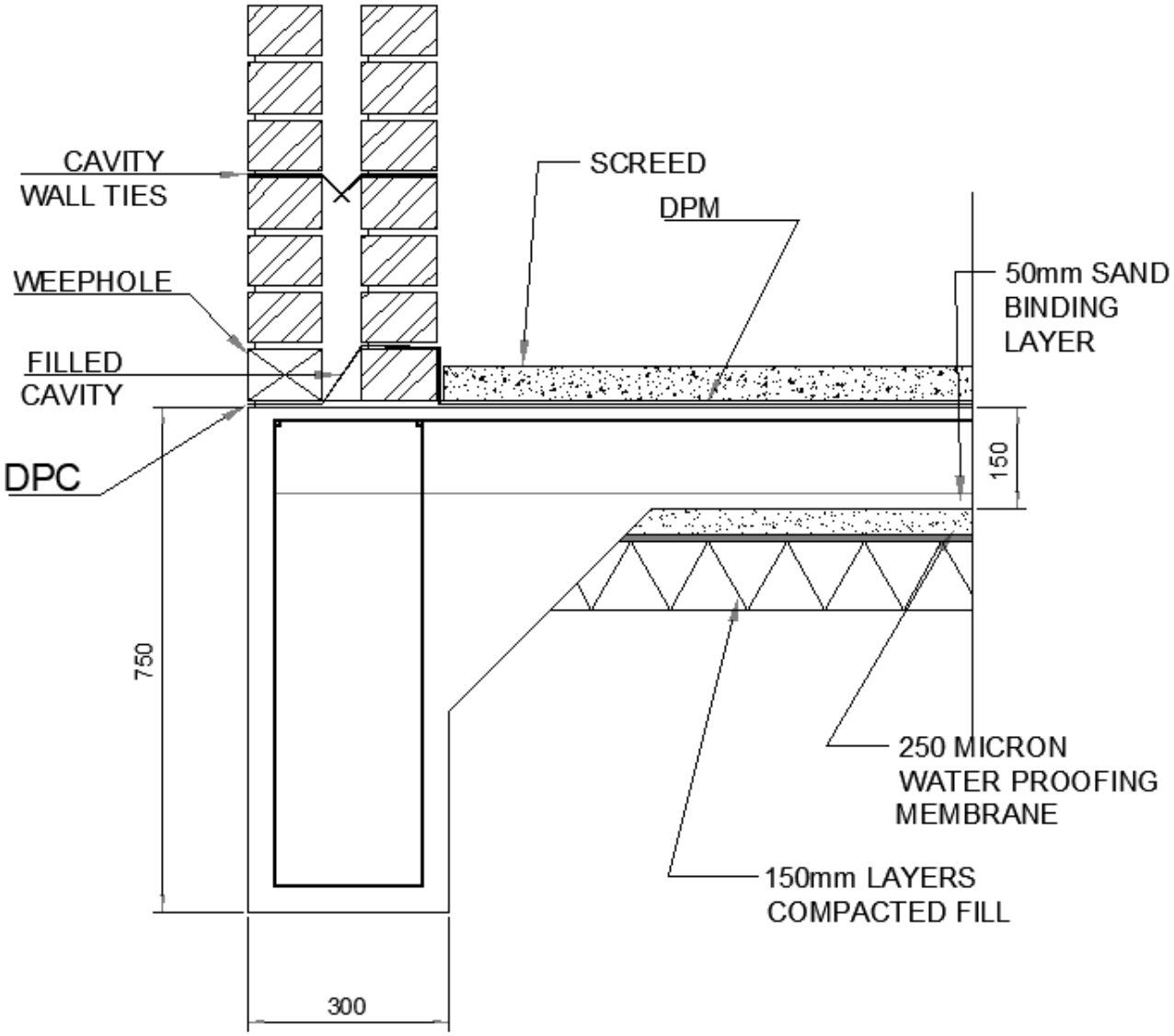

SECTION THROUGH WAFFLE RAFT FOUNDATION WITH EDGE BEAM

SCALE 1:10

QUESTION 3.1 RUBRIC			
PART OF DRAWING	**MARKING CRITERIA**	**POSSIBLE MARK**	**REMARKS**
Concrete raft, excavation depth, concrete raft thickness, profile with reinforcement	Correctness	4	
	Dimensioning	3	
	Hatching	1	
DPC, DPM, compaction layers, sand binding layer, screed	Correctness	5	Compacted hardcore, sand layer and screed
	Hatching	5	
	Labelling	5	
Wall, filled cavity, wall ties, weeping hole	Correctness	5	
	Hatching	2	
	Labelling	2	Weeping hole, wall ties
	Subtotal	32	Overall correctness
	Divide by	3.2	
	Correctness	**10**	
	Line work	**5**	
	Accuracy	**2**	
	Title and scale	**2**	
	Balanced layout and neatness	**1**	
	TOTAL	**20**	

NOTE: No marks should be allocated for any part of the drawing in the incorrect position other than the marks allocated for the hatching of that component.

If the drawing is completely incorrect, marks should be allocated for neatness and the correct title and scale. **[20]**

Copyright reserved

SUMMARY QUESTION 3

Marking criteria	Possible mark	Marker	Internal moderator	External moderator
Correctness	14			
Hatching	8			
Labels	7			
Dimensions	3			
Subtotal	**32**			
Divide by	**3.2**			
Correctness	**10**			
Line work	**5**			
Accuracy	**2**			
Title and scale	**2**			
Balanced layout and neatness	**1**			
TOTAL	**20**			

QUESTION 4.1

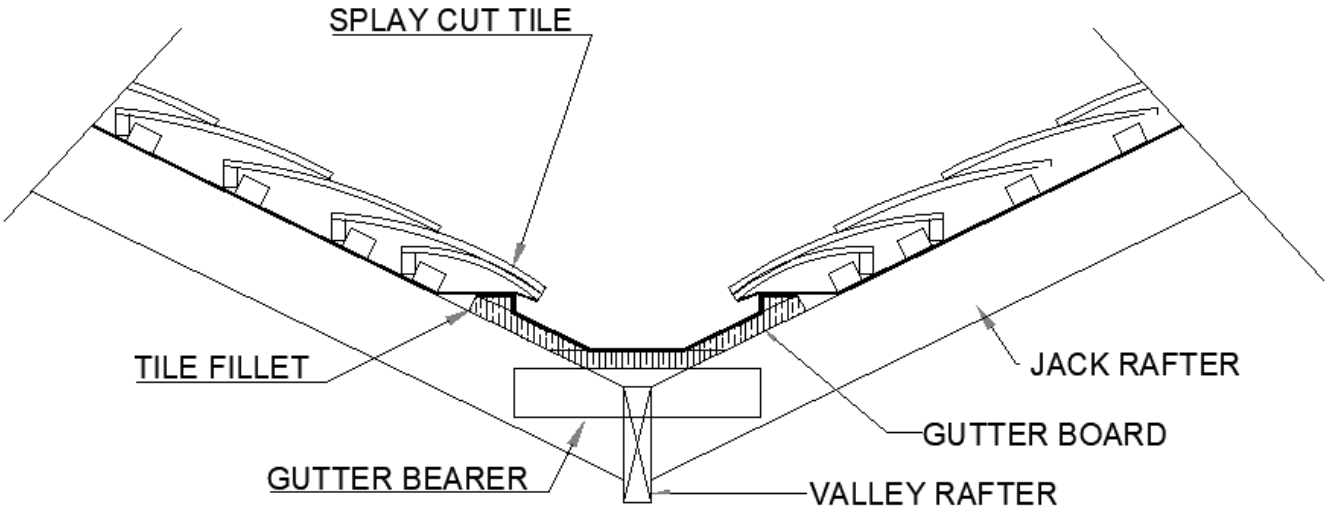

VALLEY DETAIL

QUESTION 4.1 RUBRIC			
PART OF DRAWING	**MARKING CRITERIA**	**POSSIBLE MARK**	**REMARKS**
Valley profile, tiles, splay tile, valley rafter, tile fillet	Correctness	5	
	Labelling	5	
Gutter board, gutter bearer	Correctness	2	
	Hatching	1	
	Labelling	2	
	Subtotal	15	
	Divide by	1.5	
	Correctness	**10**	
	Line work	**2**	
	Accuracy	**1**	
	Title and scale	**1**	
	Balanced layout and neatness	**1**	
	TOTAL	**15**	

NOTE: No marks should be allocated for any part of the drawing in the incorrect position other than the marks allocated for hatching of that component.

Marks should be allocated for neatness, correct title and scale if the drawing is completely incorrect. **[15]**

Copyright reserved

SUMMARY QUESTION 4.1

Marking criteria	Possible mark	Marker	Internal moderator	External moderator
Correctness	7			
Hatching	1			
Labels	7			
Subtotal	**15**			
Divide by	**1.5**			
Correctness	**10**			
Line work	**2**			
Accuracy	**1**			
Title and scale	**1**			
Balanced layout and neatness	**1**			
TOTAL	**15**			

QUESTION 4.2

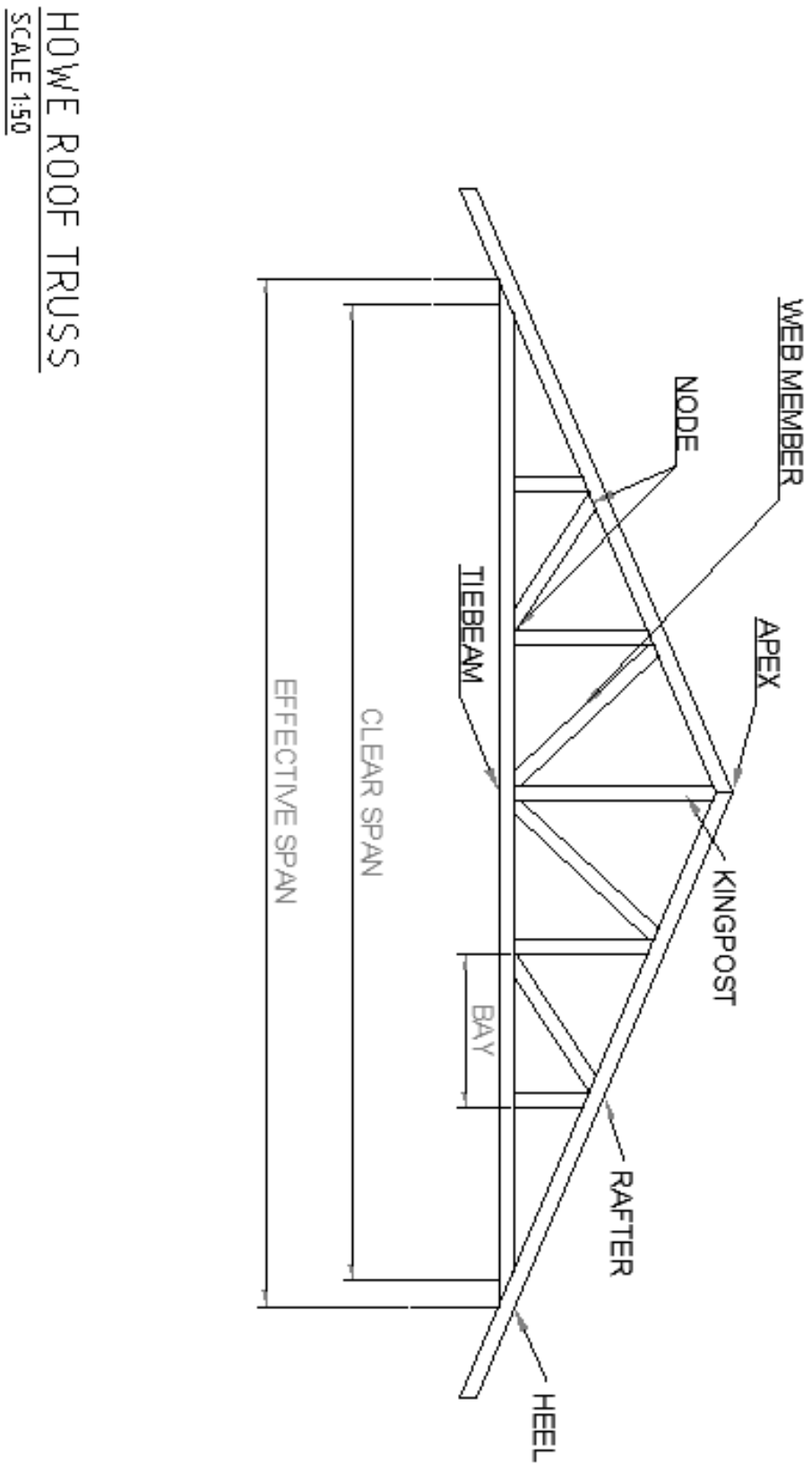
HOWE ROOF TRUSS
SCALE 1:50
WEB MEMBER
NODE
TIEBEAM
APEX
KINGPOST
EFFECTIVE SPAN
CLEAR SPAN
BAY
RAFTER
HEEL

QUESTION 4.2 RUBRIC			
PART OF DRAWING	**MARKING CRITERIA**	**POSSIBLE MARK**	**REMARKS**
Howe truss: Layout	Correctness	4	Rafters, tie beams and web members
	Labelling	8	Cavity closure, butterfly wall tie
Pitch 20˚, 8 500 mm span	Correctness	2	Should relate to scale dwg
	Dimension	0	None to be shown
	Labelling	2	Clear effective span
	Subtotal	16	Overall correctness
	Divide by	1.6	
	Correctness	**10**	
	Line work	**2**	
	Accuracy	**1**	
	Title and scale	**1**	
	Balanced layout and neatness	**1**	
	TOTAL	**15**	

NOTE: No marks should be allocated for any part of the drawing in the incorrect position other than the marks allocated for hatching of that component.

Marks should be allocated for neatness, correct title and scale if the drawing is completely incorrect. **[15]**

SUMMARY QUESTION 4.2

Marking criteria	Possible mark	Marker	Internal moderator	External moderator
Correctness	6			
Labels	10			
Dimensions	0			
Subtotal	**16**			
Divide by	**1.6**			
Correctness	**10**			
Line work	**2**			
Accuracy	**1**			
Title and scale	**1**			
Balanced layout and neatness	**1**			
TOTAL	**15**			

QUESTION 5

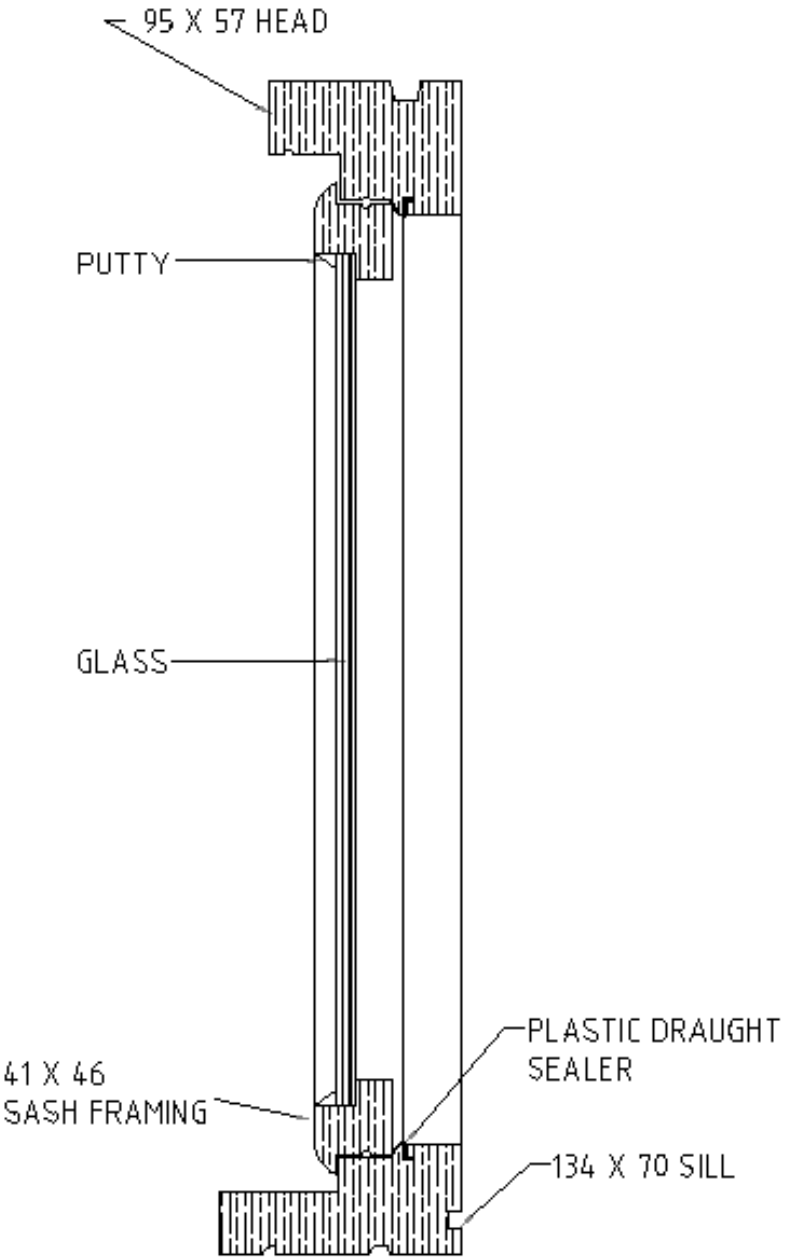

SECTION ON BS WINDOW

QUESTION 5 RUBRIC			
PART OF DRAWING	**MARKING CRITERIA**	**POSSIBLE MARK**	**REMARKS**
Glass, putty, sealer	Correctness	3	
	Hatch	2	
	Labelling	3	
Wooden window frame (Head, sash, sill)	Correctness	3	
	Hatching	1	
	Labelling	3	
	Subtotal	15	
	Divide by	1.5	
	Correctness	**10**	
	Line work	**3**	
	Accuracy	**1**	
	Title and scale	**1**	
	Balanced layout and neatness	**1**	
	TOTAL	**15**	

NOTE: No marks should be allocated for any part of the drawing in the incorrect position other than the marks allocated for hatching of that component.

Marks should be allocated for neatness, correct title and scale if the drawing is completely incorrect. **[15]**

Copyright reserved

SUMMARY QUESTION 5

Marking criteria	Possible mark	Marker	Internal moderator	External moderator
Correctness	6			
Hatching	3			
Labels	6			
Subtotal	**15**			
Divide by	**1.5**			
Correctness	**10**			
Line work	**2**			
Accuracy	**1**			
Title and scale	**1**			
Balanced layout and neatness	**1**			
TOTAL	**15**			

Copyright reserved