higher education & training

Department:
Higher Education and Training
REPUBLIC OF SOUTH AFRICA

MARKING GUIDELINE

NATIONAL CERTIFICATE (VOCATIONAL)

ROBOTICS FUNDAMENTAL
NQF LEVEL 2

22 November 2023

This marking guideline consists of 5 pages.

Copyright reserved

SECTION A

QUESTION 1

1.1 B
1.2 C
1.3 D
1.4 C
1.5 B
1.6 D
1.7 A
1.8 D
1.9 A
1.10 C

(10 × 1) **[10]**

QUESTION 2

2.1 False − It is an additive process of creating three-dimensional objects by adding material layer by layer based on a digital model.

2.2 False − GPIO programming can be performed with many different programming languages.

2.3 True – SBCs have larger computing power, while microcontrollers do not.

2.4 False − Power is the rate at which electrical energy is transferred or converted, and it is measured in watts (W).

2.5 False − Electrical conductors have a low resistance, while electrical insulators have a high resistance.

(5 × 2) **[10]**

QUESTION 3

3.1 I
3.2 E
3.3 F
3.4 D
3.5 C
3.6 A
3.7 H
3.8 K
3.9 L
3.10 J

(10 × 1) **[10]**

Copyright reserved

QUESTION 4

4.1 Programming
4.2 Electronic
4.3 Input
4.4 Commands or instructions
4.5 Scratch, Ardublock, mBlock, Miniboq, or makecode

(5 × 1) **[5]**

TOTAL SECTION A: 35

SECTION B

QUESTION 5

5.1 A – LED
B – Resistor
C – Push Button or switch
D – Breadboard
E – Microcontroller or model of Arduino(Uno) (5)

5.2 A – Emits a light
B – Slows/reduces the flow of electricity in the circuit
C – Turns the circuit on or off
D – Allows for multiple connections and prototyping
E – A microcontroller that powers and allows for the use of sensors and actuators (5)

5.3

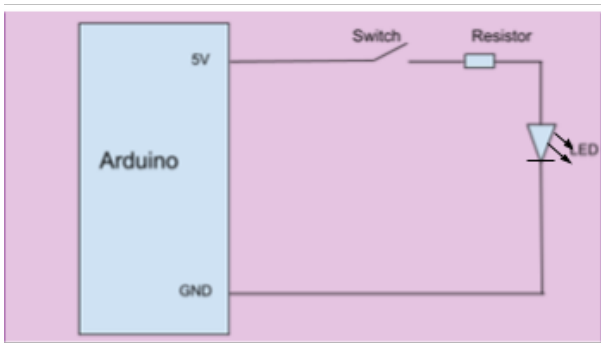

(2)

5.4 Electric gate remote control, kettle switch LED, LED light in a house, Alarm remote control, LED light on gaming system (1)

5.5
- The Arduino will have power
- It will allow the push button to turn the LED on and off
- It will allow the LED to turn on and off
- When current flows through the resistor, the current flow decreases. Part of the current's energy dissipates in the form of heat in the resistor, thus decreasing the total current (Any 2 × 1) (2)

[15]

QUESTION 6

6.1 6.1.1 Raspberry Pi, wires or leads, LED, resistor, light-dependent resistor (LDR), capacitor, breadboard (7)

6.1.2
- Light-Dependent Resistor (LDR): Changes its resistance with the amount of light, used for light sensing applications.
- Capacitor: Stores electrical charge, used for voltage stabilization and energy storage. (2)

6.2

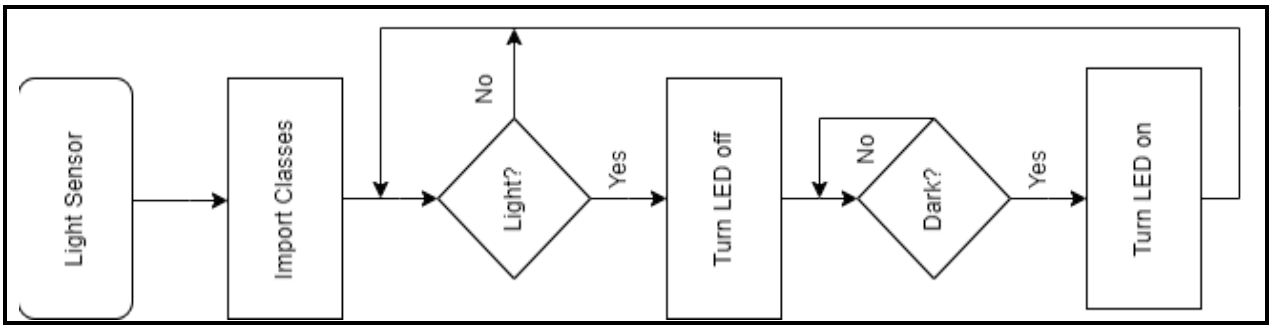

(6)

6.3 6.3.1 Python

6.3.2 While loop, forever loop or an infinite loop

6.3.3 A variable is created and assigned the value of a LightSensor object with pin 20 being passed in as an argument.

6.3.4
- This creates an infinite loop that will continue running until the program is interrupted or stopped.
- In this context, it's used to repeatedly execute the code within the loop block, which monitors the light sensor and controls the LED based on the detected light conditions.

6.3.5 The code pauses until enough light is detected and then turns the LED off to indicate it is day. A statement, 'It's light' is printed.

6.3.6 The script pauses until it is dark enough and then turns the LED on to indicate it is night. A statement, 'It's dark' is printed.

(6 × 1) (6)

6.4
- Prepare the printer by bed levelling and loading the filament
- Load the design using either a USB, SD memory card or sending file directly to the printer
- Start the printing process and check for any printer prompts or errors
- Complete the post-printing process by sanding, removing support structures, or gluing/assembling (4)

[25]

QUESTION 7

7.1 Fusion Deposition Modelling (FDM), Stereolithography (SLA), Selective Laser Sintering (SLS)

7.2 Plastic Filament, Resin, Powdered Materials

7.3 Faster and more cost-effective iterations of prototypes can be produced compared to traditional manufacturing methods.

7.4 3D printing reduces material waste as it is an additive process, promoting eco-friendly manufacturing. Many traditional manufactures use subtractive methods which generally produce more waste. Other answers to be considered would be reduced energy consumption, design optimisation, and extending the longevity of products no longer in production.

7.5 Medical applications include creating custom prosthetics, surgical guides, and organ/tissue replicas for pre-operative planning.

7.6 Slicing software like Ultimaker Cura or PrusaSlicer is used for this purpose.

7.7 Infill provides internal support and strength to the printed object while minimizing material usage.

7.8 Remove excess materials, sanding, surface melting, surface coating, chemical smoothing. (Any 2 × 1)

7.9 Layer height determines the resolution and surface finish of the printed object.

7.10 Print settings, model design issues, power interruptions, inadequate support, bed levelling.

(10 × 2) **[20]**

QUESTION 8

The answer may include any FIVE of the following:

- Enhances problem-solving skills
- Promotes creativity and innovation
- Develops computational thinking
- Prepares for the future job market
- Encourages collaboration
- Empowers digital literacy
- Cultivates perseverance
- Sparks interest in STEM
- Real-world application
- Fosters inclusivity **[5]**

TOTAL SECTION B: 65
GRAND TOTAL: 100

Copyright reserved